KUMERA

Agitator Gearboxes

Agitator Gearboxes

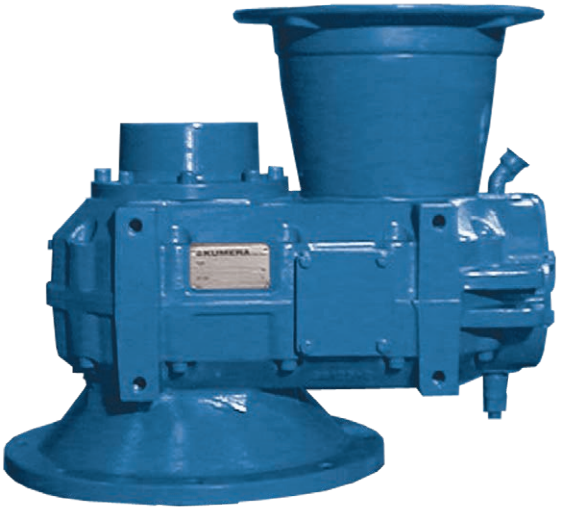

Agitator gearboxes: F-Series

Agitator gearboxes: SG-Series

Dear Designer,

Kumera Power Transmissions Group is a part of Kumera Corporation. The manufacturing plants are located in Austria, Finland, Germany, Norway, and China.

Kumera Power Transmissions Group offers the Power Plaza internet service to select optimum gearboxes for various applications, and related information such as drawings in 2D and 3D format, delivery times and prices for acknowledged customers. The Power-Plaza includes also a spare parts ordering service by submitting a Bill of Material and an Assembly Drawing, where the user can pick up needed spare parts based on the code (serial number) or order number. Maintenance Manuals are also available for use by our Customers.

Kumera sales staff all over the world are trained to consult customers in designing the most optimum drive solutions for various needs of selected industries. Their contact information is available on our website **www.kumera.com**.

Kumera Service network covers the main markets worldwide in the pulp and paper and chemical industries, large shipyards, open mines and metallurgical plants.

The Service Hotline is open 24 hours a day in seven days a week (24/7). The telephone number is available on our website www.kumera.com for immediate service actions.

Cumpact and Cumera helical gearboxes, helical-bevel gearboxes and bevel gearboxes in A, F, G, D, and LX series are introduced in a separate Kumera Helical and Bevel Gearboxes Catalogue. Other Cumera gearboxes, such as Yankee Cylinder gearboxes and tailor-made drives for the pulp and paper industry, steel mills, crane drives, geared couplings are introduced in separate catalogues, also.

Kindly request these catalogues from our sales staff if you need them in paper copies, otherwise all Kumera products can be seen on our webpages www.kumera.com or available to be printed there.

www.kumera.com

Table of content

Presentation of gearboxes, types and characteristics 22004
Type plate 22006
Type marking system 22007
Selection of gearbox 22008
Gearbox lubrication 22013

Selection tables for helical gearboxes 22014
Selection tables for bevel-helical gearboxes 22025
Thermal power ratings 22026
Exact ratios 22028

Allowable external loads 22032

Dimension drawings for helical gearboxes 22036
Dimension drawings for bevel-helical gearboxes 22054

Dimension drawings for motor adapters 22065

Average weight of gearboxes 22071
Additional weight for motor adapter and input coupling 22072
Approximate quantities of oil 22074
Recommended lubricants 22075
Location of oil plugs 22076
Customized products 22079

Presentation of gearboxes, types and characteristics

This catalogue provides information on agitator gearboxes. A separate catalogue on supplementary applications, i.e. helical gearboxes and bevel-helical gearboxes, is available upon request. These can also be used in agitator applications in which the gearbox is subjected to low or moderate external forces. See more information in the Kumera Helical and Bevel Gearboxes catalogue.

The following product series are included in this catalogue:

Cumpact Gearboxes	**SF/UF**
Cumpact Gearboxes	**SG**
Cumera Gearboxes	**SE/LE**

Gearbox ratings

All gears are case-hardened and ground. The gearbox ratings are made according to ISO standards. Ratings based on other standards such as DIN and AGMA are available on request.

Housing

The modular construction design enables installation of additional equipment onto the housing. Thus, a single housing can be transformed into a variety of applications and mounting arrangements.

Grey cast iron GJL-200 is normally used as housing material; nodular cast iron GJS-500 or fabricated housings can also be used in case exceptional durability is required.

The optimum dimensions of the housing are determined by finite element analysis (FEA).

Bearings

Antifriction bearings are used in our gearboxes. Both internal as well as external forces acting on the shaft extensions are taken into account in the bearing selection.

Shaft oil seals

The gearboxes are equipped with lip seals. Fluorine rubber (FKM) is used as sealing material if the shaft diameter is below 100 mm. In case the oil seals are larger, nitrile rubber (NBR) is used as sealing material. The E series is partly equipped with labyrinth or drywell seals. All sealing surfaces of the gearboxes in the G and E series are either hardened or nitrated. The division planes of the gearbox housings are sealed with elastic sealing compound. If necessary, special sealing solutions such as Taconite can be provided.

Careful preparation has been taken to ensure the correctness of the information contained in this catalogue but no liability are borne for any errors or omissions. We reserve the right to make changes in the interest of technical progress.

Presentation of agitator gearboxes

Helical Gearboxes

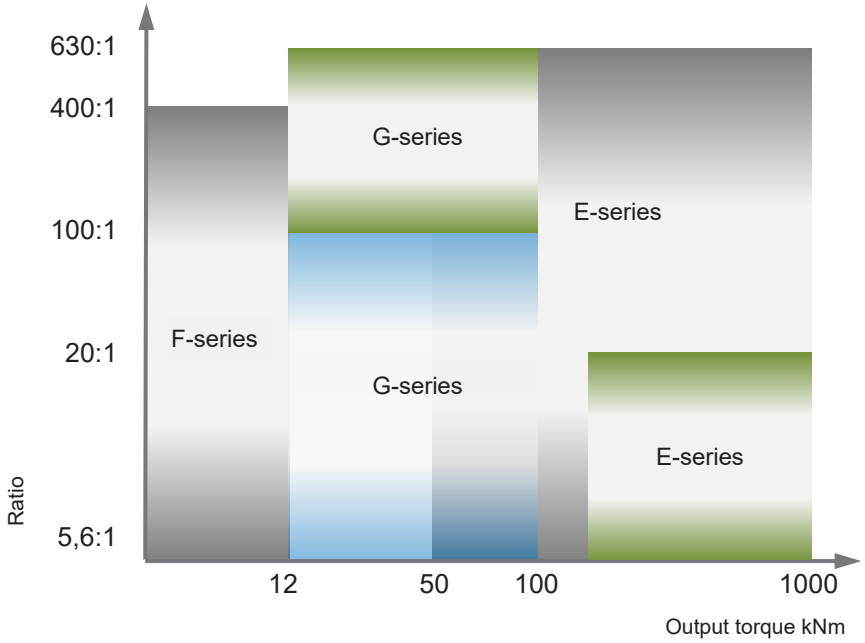

Bevel-Helical Gearboxes

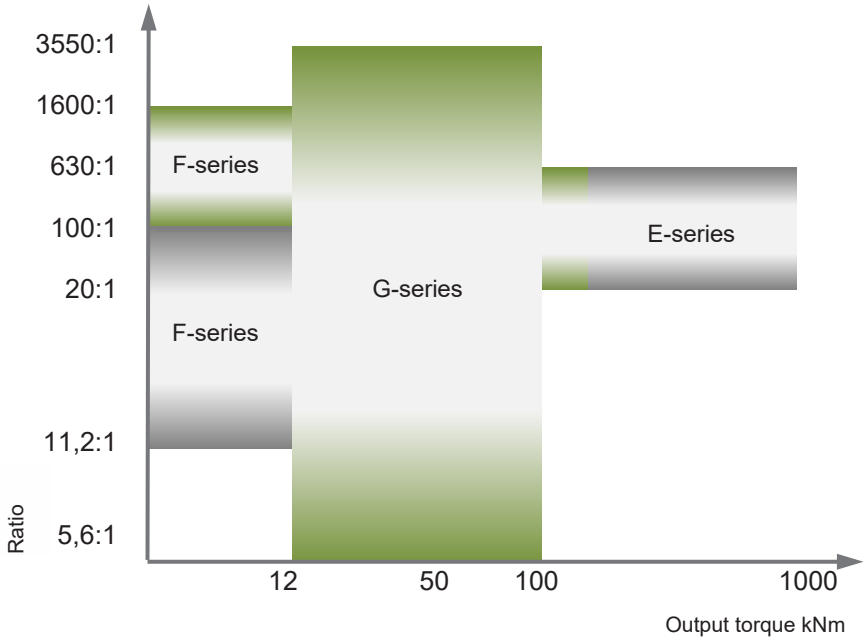

Customized Gearboxes
Not included in this catalogue.
Please contact our sales department.

Type plate

The type plate contains the most important technical information about the gearbox. The serial number of the gearbox is always individual. All information concerning the gearbox can be found by means of the serial number at our factories.

Example of a gearbox type plate:

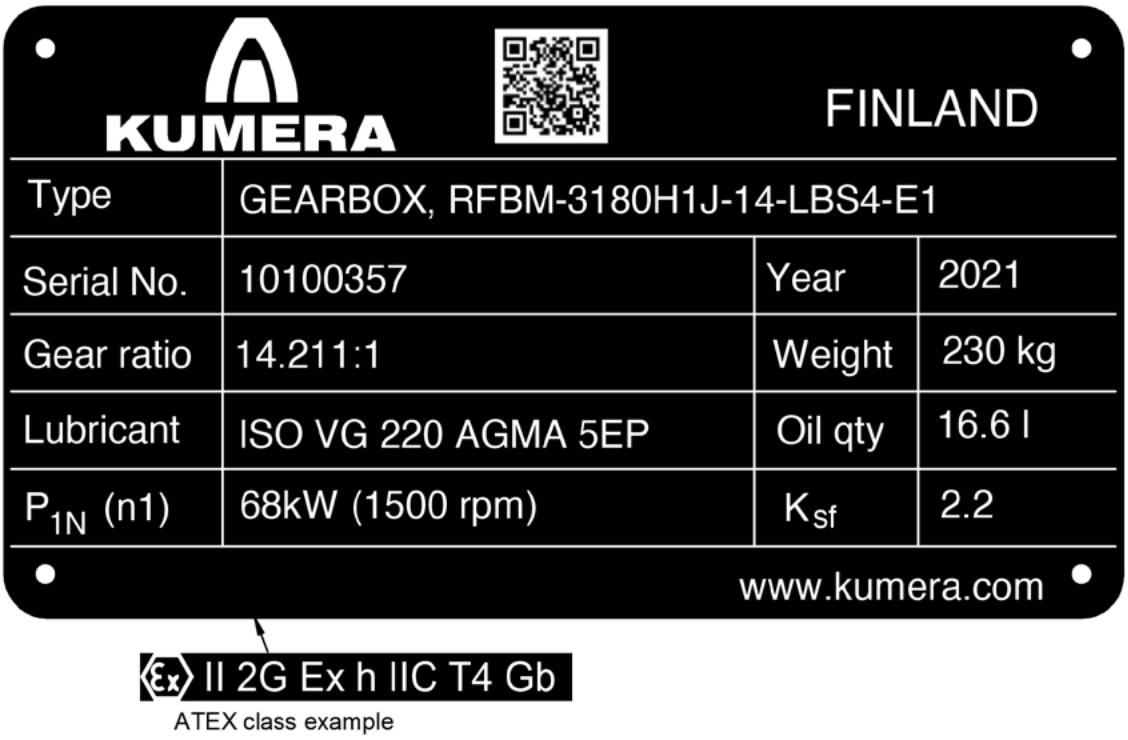

Type	Gearbox type (see page 7)
Serial No.	Gearbox serial number
Year	Manufacturing year
Gear ratio	Exact gear ratio
Weight	Weight without oil
Lubricant	Recommended viscosity of lubrication oil
Oil qty	Indicative oil capacity, to be checked using an oil sight glass or dipstick
P_{1N} (n1)	Nominal power of the gearbox
K_{sf}	Selection factor
ATEX	Note: If the gearbox is ATEX certified, the ATEX mark and class are marked in the bottom left corner.

Type marking system

S	E	L	M	−3	355	-	PT	−30	−L B S	2	−65F500	−E1

Model

L Foot mounted, helical gearbox

T Shaft mounted, helical gearbox

K Foot mounted, bevel-helical gearbox

R Shaft mounted, bevel-helical gearbox

S Agitator gearbox
(Heavy duty output shaft)

U Agitator bevel-helical gearbox

Series

F G E

Agitator gearbox type

L Foot mounted, helical gearbox
T Shaft mounted, helical gearbox
K Foot mounted, bevel-helical gearbox
R Shaft mounted, bevel-helical gearbox

Motor adapter

Number of reduction stages

2 3 4 5

Gearbox size

Output shaft options

H1 Hollow shaft, normal

H2 Hollow shaft, stepped

H3 Hollow shaft, shrink disc

Additional equipment

T Fan

V Water cooling coil

Z Pressure lubrication unit

P Lubrication oil pump

K Centralized lubrication system

Ratio

Shaft arrangement

L Output shaft to the left
R Output shaft to the right
V Input and output shaft to the left
H Input and output shaft to the right

Mounting positions

D Output shaft vertical down
E Output shaft vertical up

Foot positions

S On the same side as the output shaft
O On the opposite side from the output shaft

Rotation directions of shafts

1 Output shaft clockwise
2 Output shaft counter-clockwise
3 Output shaft clockwise, input shaft clockwise
4 Output shaft counter-clockwise, input shaft clockwise
5 Output shaft clockwise, input shaft counter-clockwise
6 Output shaft counter-clockwise, input shaft counter-clockwise

IEC code for flange of the electric motor

Code of special construction

Detailed type marking instructions are available on request

Selection of a gearbox

When selecting a gearbox, attention must be paid to the following factors:

1. Shaft and mounting arrangements

- Shaft arrangements and type
  - Horizontal / vertical
  - Solid / hollow
- Mounting type and position
  - Foot / torque arm
  - Horizontal / vertical
- Driven machine mounting
  - Motor adapter and flange motor
  - Motor standing on feet

2. Selection of the gearbox size

To select the proper gearbox size, the following four requirements have to be fulfilled:

1. *Nominal mechanical power rating*
   The mechanical power transmission rating indicates the maximum allowable nominal torque on the output shaft of the gearbox.

2. *Peak load mechanical rating*
   The peak load mechanical rating indicates maximum allowable load peaks during operating, e.g., peak operating, starting or braking load.

3. *External shaft end forces.*
   The shaft end radial / axial load rating indicates maximum allowable external forces on shaft ends. These forces can be caused by, e.g., a belt / chain drive, driven machine or cardan shaft mass. The shaft coupling mass is usually negligible.

4. *Thermal rating.*
   The thermal power transmission rating indicates the amount of power that the gearbox can transmit without additional cooling. When necessary, a suitable auxiliary cooling method should be selected in order to obtain a correct heat balance.

3. **Additional equipment**

- Backstop
- Pressure lubrication
  - Pump mounted on the shaft of the gearbox
  - Electrically driven oil pump
- Cooling device
  - Cooling water coil
  - Fan cooler
  - Separate cooling unit
- Shaft couplings
- Belt drives
- Motor brackets
- Heating elements

Selection of a gearbox size

1. Symbols used

Symbol	Explanation
K_{SF}	Selection factor
K_{peak}	Power / Torque peak factor
K_{start}	Start peak factor
B_{ref}	Thermal factor, Ambient temperature
B_A	Thermal factor, Altitude
B_T	Thermal factor, Max oil sump temperature
B_D	Thermal factor, Operation time per each hour
$i = n_1/n_2$	**Gear ratio**
n_1 [1/min]	Input speed
n_2 [1/min]	Output speed
η	Efficiency of the gearbox
P_1 [kW]	Input power
P_{1m} [kW]	Input power, Motor nominal
P_{1p} [kW]	Input power, Peak loads
P_{1N} [kW]	Gearbox nominal power rating
P_{1V} [kW]	Required mechanical power rating, Nominal load
P_{1pV} [kW]	Required mechanical power rating, Peak load
P_T [kW]	Thermal rating of gearbox
T_2 [Nm]	Output torque
T_{2N}	Gearbox nominal torque rating

Selection example

1. Initial data

Initial data	Symbol [unit]	Value
Requested gear type	-	Helical
Driven machine	-	Mixer / Aerator
Force location from the shaft end	E_F [m]	5
Radial force on the output shaft	F_r [kN]	3
Axial force on the output shaft	F_a [kN]	0
Driving machine	P_{1m} [kW]	Electric motor 55kW,1500rpm, direct start, coupling connected
Required output torque	T_2 [Nm]	15000
Output speed	n_2 [1/min]	30
Input speed	n_1 [1/min]	1500
Operating time	h/d	24
Starts per hour	-	3
Ambient temperature	[°C]	-30 … 40
Altitude	[m]	200
Maximum allowed gear temp	[°C]	80
Operation time per each hour	[%]	100
Required ratio	**$i = n_1/n_2$ [-]**	**=1500/30=50**

2. Efficiency

The following approximate values can be used as efficiencies:

Helical gearboxes	Bevel / Bevel-Helical gearboxes	η
1-stage	-	0.99
2-stage	1-stage	0.98
3-stage	2-stage	0.97
4-stage	3-stage	0.96
-	4-stage	0.95
-	5-stage	0.94

3. Power / Torque

The relationship between the input power and the output torque is calculated by the following formulas:

$$P_1 = \frac{T_2 \times n_2}{9550 \times \eta} \qquad T_2 = \frac{P_1 \times 9550 \times \eta}{n_2}$$

4. Required selection power rating

The selection rating for a gearbox can be calculated by multiplying the input power by the selection factor K_{sf}.

$$P_{1N} \geq P_{1v} = P_1 \times K_{sf}$$

Then, a gearbox shall be selected from the power rating tables under the desired ratio and speed so that the rating (P_{1N}) is equal to or higher than P_{1v}.

2. Selection example. Efficiency

The required ratio of 50 gives a 3-stage gearbox. Efficiency for calculation is 0.97 for a 3-stage helical gearbox.

3. Selection example. Driving power

Conversion of output torque to input power

$$P_1 = \frac{T_2 \times n_2}{9550 \times \eta} \Rightarrow P_1 = \frac{15000 \times 30}{9550 \times 0.97} = 48.6\ kW$$

4. Selection example. Required selection power

For an aerator and operating time 24h/d, the selection factor table gives a K_{sf} factor of 2.0. The following equation gives the selection rating

$$P_{1v} = 48.6\ kW \times 2.0 = 97\ kW$$

The power rating table on the page 22019 shows that the power of the SG-3280 gearbox with a speed of 1500 1/min and ratio i = 50:1 is 110 kW.

$$P_{1N} \geq P_{1v} \Rightarrow 110\ kW \geq 97\ kW \Rightarrow OK$$

Selection factor K_{sf}

Application	Effective load duration		
	< 3 h/d	3-10 h/d	>10 h/d
Agitators / Mixers			
Pure liquids	1.0	1.0	1.3
Liquids and solids	1.2	1.4	1.6
Liquids variable density	1.3	1.5	1.7
Aerators	1.8	1.8	2.0
Blowers and Fans			
Centrifugal	1.0	1.2	1.4
Cooling towers	2.0	2.0	2.0
Industrial and mine	1.5	1.5	1.5
Compressors			
Centrifugal	1.4	1.4	1.5
Reciprocating	1.8	1.8	2.0
Screw	1.5	1.5	1.8
Conveyors			
Uniformly loaded or fed	1.0	1.2	1.4
Not uniformly fed	1.2	1.4	1.6
Bucket Elevator	1.0	1.3	1.5
Apron	1.0	1.3	1.6
Belt	1.0	1.2	1.5
Screw	1.0	1.3	1.5
Reciprocating, shaking	1.5	1.8	2.0
Cranes (*			
Main hoists	1.2	1.4	1.8
Boom hoist	1.3	1.3	1.5
Travel	1.1	1.6	2.0
Crushers			
Ore or stone	1.8	2.0	2.2
Dredges			
Cable reels	1.3	1.3	1.5
Cutter head drives	2.0	2.0	2.2
Pumps	2.0	2.0	2.2
Winches	1.3	1.3	1.5
Lumber industry			
Bark removers	1.8	1.8	2.0
Barking drums	1.8	1.8	2.0
Feeders	1.5	1.5	1.8
Log conveyors	1.5	1.8	2.0

Application	Effective load duration		
	< 3 h/d	3-10 h/d	>10 h/d
Lumber industry (continued)			
Log turning devices	1.5	1.8	2.0
Sorting tables	1.3	1.5	1.6
Metal industry			
Cutting rolls	1.5	1.8	2.0
Plate rolls	1.5	1.8	2.0
Wire drawing and flattening machines	1.3	1.5	1.7
Wire winding machines	1.3	1.5	1.7
Mills and drums			
Ball, Rod	1.8	2.0	2.0
Cement	1.5	1.8	1.8
Cooling and drying	1.5	1.8	1.8
Kilns	1.5	1.8	1.8
Pulp & paper industries			
Calenders	1.8	1.8	2.0
Chipping machines	1.8	2.0	2.2
Cylinders	1.8	1.8	2.0
Drying cylinders	1.8	1.8	2.0
Pulpers	2.0	2.0	2.0
Suction cylinders	1.8	1.8	2.0
Screw reclaimer	1.8	2.0	2.2
Pumps			
Gear	1.0	1.3	1.5
Centrifugal	1.0	1.3	1.5
Reciprocating	1.4	1.5	1.8
Screw	1.0	1.3	1.5
Rubber/plastic Industries			
Mixing mills	1.8	2.0	2.0
Rubber calenders	1.3	1.5	1.5
Rubber mills	1.5	1.8	2.0
Screens			
Rotating screens, stone or gravel	1.3	1.5	1.7
Sugar industry			
Mills	1.5	1.8	1.8
Slicers	2.0	2.0	2.0
Textile industry	1.3	1.5	1.5

(Selection according to FEM 1.001 specification on request*
- These factors are empirical and based on AGMA 6110 and ISO/TR13593 standards and our experience.
- Other applications and unusual designs, on request.
- The values apply only for electric or hydraulic motor and turbine-driven gearboxes.
- For a multi-cylinder combustion engine driven gearbox add 0.25 and for a single cylinder engine driven gearbox add 0.5 to the selection factor K_{sf}.

5. Checking of peak power / torque

Torque peaks can occur during operation, start or braking. The maximum selection rating for a gearbox can be calculated by multiplying the peak input power of the gearbox by factor f_{peak}. If only the torque is known, the power calculation has to be done with a rotation speed that matches the selection table speed.

$$P_{1N} \geq P_{1pV} = P_{1p} \times f_{peak}$$

Power / Torque peak factor f_{peak}				
	Load peaks per hour			
	1..5	6..50	51..200	>200
Load peaks in one direction	0.5	0.7	0.9	1
Load peaks in both directions	0.7	1	1.3	1.45

If the peak power is not known, an assumption can be made according to the following equation and table.

$$P_{1p} = P_{1m} \times f_{start}$$

Start peak factor f_{start}	
Start type	**Factor f_{start}**
Electric motor, direct start	3
Electric motor, soft start	1.8
Electric motor, frequency inverter	1.8
Electric motor, hydraulic coupling	1.6...2.0

The gearbox power rating has to be equal or bigger than the peak load selection rating (P_{1pv}).

6. Checking of shaft end external forces

The allowed external forces for an input shaft are given in the selection tables. Force is acting on the middle of the shaft end length, if not otherwise mentioned. For an output shaft, the allowed forces are given in a separate table or diagram. The output shaft load capacity is a complex combination of several factors. The external load tables and diagrams are only for certain operation conditions. Please consult Kumera for exact lifetime calculations for your application.

5. Selection example. Start peaks

From the initial data we see that there are 3 starts per hour and no other load peaks occur during operation. The starts are only in one direction. So from the table a value 0.5 can be found for the factor f_{peak}. That gives:

$$P_{1pv} = P_{1p} \times f_{peak}$$

$$\Rightarrow P_{1pv} = 165\ kW \times 0.5\ = 82.5\ kW$$

If accurate values are not available, the start peak can be calculated from the nominal motor power and factor f_{start}. That gives:

$$P_{1p} = P_{1m} \times f_{start} \Rightarrow P_{1p} = 55\ kW \times 3 = 165\ kW$$

Power rating for the preliminarily selected gear size was 110 kW, which is bigger than the start peak selection rating 82.5 kW. The load peaks are acceptable for the selected gearbox.

6. Selection example. Radial / axial loads on shaft ends

The diagram on page 22033 gives allowed radial force of 5 kN when axial force is 0 kN and force location from shaft end is 5m. This is bigger than acting (3kN) axial force. Axial force is acceptaple for the secelted gearbox.

7. Checking of thermal power transmission rating

The power on the input shaft must be lower than the thermal power (with the selected cooling arrangement), which is taken from the power rating table and multiplied by the temperature factors B_{ref}, B_A, B_T and B_D.

$$P_1 \leq P_T \times B_{ref} \times B_A \times B_T \times B_D$$

If the thermal rating is not sufficient with possible cooling arrangements (fan or water cooling coil), the thermal rating can be increased with an additional pressure lubrication unit with cooling. If additional cooling is needed, please contact Kumera.

7. Selection example. Checking of thermal power transmission rating

As can been seen, the nominal thermal rating for the preliminarily selected gearbox is 112 kW. The actual rating can be calculated with thermal factors given in the following table. For an ambient temperature factor, the maximum ambient temperature should be used

$$P_1 \leq P_T \times B_{ref} \times B_A \times B_T \times B_D \Rightarrow$$

$$P_1 \leq 112\ kW \times 0.75 \times 1 \times 1 \times 1 = 84\ kW$$

$$\Rightarrow 48.6\ kW \leq 84\ kW$$

The thermal rating of the gearbox is sufficient and additional cooling is not needed.

Thermal factors

Ambient temperature B_{ref}		Altitude B_A		Max. oil sump temperature B_T		Operation time per hour B_D	
Ambient temperature [°C]	Factor B_{ref}	Altitude [m]	Factor B_A	Sump temp. [°C]	Factor B_T	Percent	Factor B_D
10	1.11	0 - sea level	1.00	60	0.38	100 %	1.00
15	1.06	750	0.95	65	0.46	80 %	1.05
20	1.00	1500	0.90	70	0.55	60 %	1.15
25	0.94	2250	0.85	75	0.63	40 %	1.35
30	0.88	3000	0.81	80	0.72	20 %	1.80
35	0.82	3750	0.76	85	0.81		
40	0.75	4500	0.72	90	0.90		
45	0.68	5250	0.68	95	1.00		
50	0.60						

- The factors are based on ISO/TR 13593.
- The thermal factor B_T is a simplification of many variables affecting the gearbox's operational temperature. There may occur variation between the calculated and measured temperature.

The thermal rating table values (P_T) refer to:

- *Ambient temperature 20°C*
- *Air velocity 1.4 m/s*
- *Altitude up to 750 m*
- *Cooling coil input water temperature 20°C*
- *Cooling coil outlet temperature unlimited*
- *Unrestricted air flow around gearbox; e.g., covers or structures blocking air flow will reduce the thermal rating of the gearbox.*
- *Sufficient protection needed against sunlight or another heat source.*

Gearbox lubrication

For agitator gearbox pressure lubrication is often required. At gearbox selection table is specified if pressure lubrication is needed. Also if additional cooling is required, a pressure lubrication unit with cooling is needed.
The standard types of pressure lubrication units are:

- Shaft end pump
- Electrically driven pump with or without a water or fan cooler

Lubricant viscosity class

The required lubrication oil viscosity class shall be chosen by the long term oil sump temperature. The temperature can be estimated with a thermal factor B_T.

$$B_T = \frac{P_1}{P_T \times B_{ref} \times B_A \times B_D}$$

A corresponding oil sump temperature for the temperature factor (B_T) can be found in the thermal factor table.

If the oil sump temperature of the gearbox is unknown, the oil viscosity class can be selected according to the ambient temperature. The recommended oil viscosity classes are specified in the following table.

Recommended viscosity for lubricant			
Splash or bath lubrication			
Oil sump temperature	*Max. ambient temperature*	Mineral oil	Synthetic oil
< 60 °C	*< 25 °C*	220	220
61-80 °C	*26-45 °C*	320	320
81-95 °C	*46-60 °C*	-	460
Pressure lubrication			
Oil sump temperature	*Max. ambient temperature*	Mineral oil	Synthetic oil
< 60 °C	*< 25 °C*	150	150
61-80 °C	*26-45 °C*	220	220
81-95 °C	*46-60 °C*	-	320
	Lubrication unit with additional cooling		
	Lubrication unit without additional cooling		

NOTE. The proper lubrication oil viscosity class is selected by Kumera and marked on the gearbox type plate.

Heating elements

Heating elements are needed when oil temperature is low. For splash and bath lubrication, the limit is the oil pour point and, for pressure lubrication, the temperature limit is the maximum allowed viscosity for the pressure lubrication unit. Approximate temperature limits for different viscosity classes are shown in the following table:

Temperature limits without heating elements			
Oil viscosity class	**Splash or bath lubrication**		**Pressure lubrication**
	Mineral oil	**Synthetic oil**	**Mineral and synthetic oil**
ISO VG 150	-20 °C	-40 °C	+6°C
ISO VG 220	-18 °C	-40 °C	+10°C
ISO VG 320	-15 °C	-35 °C	+15°C
ISO VG 460	-12 °C	-30 °C	+20°C

Example gearbox lubrication

Because the thermal rating of the gearbox was sufficient, no additional cooling is needed. Also in the selection table there was no demand for pressure lubrication.

An estimation for the oil sump temperature can be calculated as follows:

$$B_T = \frac{P_1}{P_T \times B_{ref} \times B_A \times B_D} \Rightarrow$$

$$B_T = \frac{48.6\ kW}{112\ kW \times 0.75 \times 1 \times 1} = 0.58$$

From the thermal factor table a corresponding temperature ~72°C can be found for the factor B_T=0.58, which with pressure lubrication gives the oil viscosity class ISO VG 220.

The minimum ambient temperature of -30°C is too low for ISO VG 220 viscosity with pressure lubrication. Therefore heating elements is required.

Selection table for Helical Gearboxes SF-2000

i	n_1	2080		2090		2100		2112		2125		2140		2160		2180		2200	
		P_{1N}	R_1	P_{1N}	R_1	P_{1N}	R_1	P_{1N}	R_1	P_{1N}	R_1	P_{1N}	R_1	P_{1N}	R_1	P_{1N}	R_1	P_{1N}	R_1
	1/min	kW	kN	kW	kN	kW	kN	kW	kN	kW	kN	kW	kN	kW	kN	kW	kN	kW	kN
5,6:1	1500	8,6	0,87	12,5	1,3	18,5	2,7	27,5	2,3	37	3,7	59	4,3	79	5,6	120	5	195	4,2
	1000	6,5	0,98	9,2	1,5	14	3,1	19	2,8	26,5	4,3	43	5	59	6,4	89	5,7	130	6,1
	750	5,3	1,1	7,6	1,7	11	3,4	14,5	3,2	20,5	4,9	32	5,9	46	7,2	69	6,7	98	7,6
6,3:1	1500	8,6	0,87	12,5	1,3	18,5	2,7	27,5	2,3	37	3,7	59	4,3	79	5,6	120	5	195	4,2
	1000	6,5	0,98	9,2	1,5	14	3,1	19	2,8	26,5	4,3	43	5	59	6,4	89	5,7	130	6,1
	750	5,3	1,1	7,6	1,7	11	3,4	14,5	3,2	20,5	4,9	32	5,9	46	7,2	69	6,7	98	7,6
7,1:1	1500	8,6	0,87	12,5	1,3	18,5	2,7	27,5	2,3	37	3,7	59	4,3	79	5,6	120	5	195	4,2
	1000	6,5	0,98	9,2	1,5	14	3,1	19	2,8	26,5	4,3	43	5	59	6,4	89	5,7	130	6,1
	750	5,3	1,1	7,6	1,7	11	3,4	14,5	3,2	20,5	4,9	32	5,9	46	7,2	69	6,7	98	7,6
8:1	1500	8,6	0,79	12,5	1,2	18,5	2,6	27,5	2,1	37	3,4	59	4	79	5,2	120	4,4	195	3,3
	1000	6,5	0,88	9,2	1,4	14	2,9	19	2,6	26,5	4,1	43	4,7	59	5,9	89	5,1	130	5,3
	750	5,3	0,97	7,6	1,5	11	3,3	14,5	3	20,5	4,6	32	5,6	46	6,8	69	6	98	6,7
9:1	1500	8,6	0,70	12,5	1,1	18,5	2,4	27,5	1,9	37	3,2	59	3,6	79	4,8	120	3,8	195	2,4
	1000	6,5	0,78	9,2	1,3	14	2,7	19	2,4	26,5	3,8	43	4,3	59	5,4	89	4,4	130	4,4
	750	5,3	0,86	7,6	1,4	11	3,1	14,5	2,8	20,5	4,4	32	5,2	46	6,3	69	5,3	98	5,8
10:1	1500	8,6	0,70	12,5	1,1	18,5	2,4	27,5	1,9	37	3,2	59	3,6	79	4,8	120	3,8	195	2,4
	1000	6,5	0,78	9,2	1,3	14	2,7	19	2,4	26,5	3,8	43	4,3	59	5,4	89	4,4	130	4,4
	750	5,3	0,86	7,6	1,4	11	3,1	14,5	2,8	20,5	4,4	32	5,2	46	6,3	69	5,3	98	5,8
11,2:1	1500	7,8	0,72	11,5	1,1	17	2,4	25	1,9	33	3,3	54	3,7	73	4,8	110	3,8	175	2,8
	1000	5,9	0,81	8,5	1,3	12,5	2,8	17	2,5	24	3,9	38	4,5	53	5,6	79	4,8	115	4,9
	750	4,8	0,89	6,9	1,4	9,8	3,2	12,5	3	18,5	4,4	28,5	5,4	42	6,3	61	5,7	87	6,3
12,5:1	1500	7,2	0,71	10,5	1,1	15,5	2,5	23	1,9	31	3,2	50	3,6	68	4,7	100	3,9	155	3,2
	1000	5,4	0,81	7,9	1,3	10,5	3,0	15,5	2,5	22	3,9	34	4,6	49	5,6	73	4,7	100	5,5
	750	4,4	0,89	6,5	1,4	8,1	3,4	11,5	3	17	4,4	25	5,6	38	6,4	55	5,9	77	6,7
14:1	1500	6,6	0,71	9,1	1,2	15	2,3	20	2	28	3,3	45	3,7	62	4,7	93	3,8	135	3,7
	1000	5	0,79	6,1	1,5	10,5	2,8	13,5	2,6	19,5	4,0	30	4,8	44	5,7	65	4,9	90	5,7
	750	4	0,89	4,7	1,8	8,1	3,2	10	3,1	15,5	4,4	22,5	5,7	34	6,6	49	6,1	67	7,3
16:1	1500	6,2	0,67	8,9	1,1	13,5	2,4	18	2,1	25	3,3	40	3,8	56	4,7	84	3,8	120	4
	1000	4,6	0,78	6,7	1,2	9,5	2,8	12	2,7	17,5	4,0	26,5	5	40	5,7	58	5,1	80	5,9
	750	3,7	0,87	5,3	1,4	7,4	3,2	9	3,2	14	4,5	20	5,8	30	6,8	43	6,4	60	7,4
18:1	1500	5,5	0,91	8,2	1,4	12	1,7	16	2,6	22,5	3,4	36	4,3	51	5	76	5,5	110	6,2
	1000	3,9	1,1	6,1	1,5	8,6	2,1	10,5	3,2	16	3,3	23,5	5,1	36	6	52	6,9	73	8,2
	750	3	1,3	4,7	1,8	6,6	2,3	8	3,6	12,5	3,3	18	5,1	27	6,8	39	8,2	55	9,7
20:1	1500	5	0,71	7,2	1,1	10,5	1,5	14,5	2,2	20,5	3,1	31	3,7	44	4,3	59	5,4	94	5
	1000	3,4	0,94	4,9	1,5	7,1	1,9	9,6	2,8	14,5	3,2	20,5	4,8	29,5	5,6	40	6,9	63	6,9
	750	2,6	1,1	3,7	1,7	5,4	2,2	7,2	3,3	11,5	3,2	15,5	5	22	6,6	30	8,1	47	8,6

	i	2080	2090	2100	2112	2125	2140	2160	2180	2200
T_{2N}[kNm]	10:1	0,53	0,77	1,2	1,7	2,3	3,5	5	7,5	12,2

R_1 allowable radial load in the middle of the input shaft extension (selection factor $K_{SF} \geq 1,25$) ..... [kN]

If the gearbox is subjected to low or moderate external forces, gearboxes without a reinforced low speed shaft can be used in agitator applications. See more information in the Kumera Helical and Bevel Gearboxes catalogue.

Selection table for Helical Gearboxes SG-2000

i	n_1	2225		2250		2280		2315		2355		2400	
		P_{1N}	R_1	P_{1N}	R_1	P_{1N}	R_1	P_{1N}	R_1	P_{1N}	R_1	P_{1N}	R_1
	1/min	kW	kN	kW	kN	kW	kN	kW	kN	kW	kN	kW	kN
5,6:1	1500	530	4,6	760	0	1100	0	1550	0	2250	0	2850	9,3
	1000	360	7,6	510	5,3	740	0	1050	0,69	1500	0	1900	21
	750	265	11	380	8,5	550	5,8	770	9,7	1100	0	1450	28
6,3:1	1500	470	7,1	690	4,2	950	1,4	1300	6,4	1950	0	2650	15
	1000	310	11	460	8,0	630	7,5	870	12	1300	0	1750	27
	750	235	13	350	11	470	11	660	16	970	8,9	1300	36
7,1:1	1500	390	10	580	8,2	790	8,2	1100	12	1650	2,7	2200	27
	1000	260	14	390	12	530	13	740	18	1100	12	1500	37
	750	195	17	290	15	400	16	550	23	830	17	1100	47
8:1	1500	360	10	520	8,9	720	8,6	1000	13	1500	6,0	2000	28
	1000	240	14	350	13	480	13	660	19	990	13	1350	39
	750	180	17	260	16	360	17	500	24	740	19	1000	48
9:1	1500	320	11	470	9,5	640	9,7	890	14	1300	9,1	1800	30
	1000	215	14	310	13	430	14	590	21	860	16	1200	41
	750	160	17	235	16	320	18	450	25	640	22	900	50
10:1	1500	290	11	420	10	580	10	800	15	1150	11	1600	32
	1000	190	15	280	14	390	14	530	21	770	18	1100	41
	750	145	18	210	17	290	18	400	26	570	24	810	51
11,2:1	1500	255	12	380	10	510	11	720	16	1050	11	1450	33
	1000	170	16	250	14	340	16	480	22	710	18	960	44
	750	130	18	190	17	255	19	360	26	530	23	720	53
12,5:1	1500	225	13	330	11	440	12	630	17	940	12	1250	36
	1000	150	16	220	15	295	17	420	23	630	19	850	46
	750	115	18	165	18	220	20	310	28	470	24	630	55
14:1	1500	200	3,7	295	5,8	410	5,3	580	7,0	830	0	1150	16
	1000	135	5,8	195	9,1	270	9,3	380	12	550	4,2	760	25
	750	100	7,7	150	11	205	12	290	15	420	8,4	570	32
16:1	1500	175	4,2	260	6,4	360	6,1	510	8,0	730	0	1000	18
	1000	120	6,1	175	9,4	240	9,8	340	13	490	6,0	670	27
	750	88	8,2	130	12	180	13	255	16	370	9,7	500	34
18:1	1500	160	5,4	220	9,1	310	9,2	460	11	640	5,9	890	24
	1000	105	7,8	145	12	210	13	310	15	430	11	590	33
	750	80	9,4	110	15	155	16	230	19	320	15	440	40
20:1	1500	145	5,5	195	9,6	270	10	400	12	570	6,8	820	23
	1000	95	8,0	130	13	180	14	270	16	380	12	550	32
	750	72	9,6	97	15	135	17	200	20	285	16	410	39

Pressure lubrication required

	i	2225	2250	2280	2315	2355	2400
T_{2N}[kNm]	10:1	17,5	25,5	35	50	71	100

R_1 input shaft radial load (selection factor $K_{SF} \geq 1,5$) ..... [kN]

If the gearbox is subjected to low or moderate external forces, gearboxes without a reinforced low speed shaft can be used in agitator applications. See more information in the Kumera Helical and Bevel Gearboxes catalogue.

Selection table for Helical Gearboxes

SEL-2000, LE-2000

i	n_1	2315	2355	2400	2425	2450	2475	2500	2530
		P_{1N}	P_{1N}	P_{1N}	P_{1N}	P_{1N}	P_{1N}	P_{1N}	P_{1N}
	1/min	kW	kW	kW	kW	kW	kW	kW	kW
5,6:1	1800	1570	2180	3230	3955	4215	4490	*	*
	1500	1365	1875	2780	3410	3655	3880	4820	*
	1000	985	1345	2010	2445	2620	2775	3460	4200
6,3:1	1800	1565	2180	3235	3960	4240	4485	*	*
	1500	1330	1865	2800	3400	3630	3860	4825	*
	1000	870	1350	1935	2250	2570	2785	3465	4205
7,1:1	1800	1370	2050	2965	3480	4215	4485	*	*
	1500	1140	1710	2450	2900	3490	3870	4830	*
	1000	745	1125	1615	1905	2295	2565	3235	3690
8:1	1800	1235	1760	2595	3120	3795	4170	*	*
	1500	1025	1465	2140	2580	3140	3475	4430	*
	1000	670	965	1400	1695	2065	2280	2915	3340
9:1	1800	1105	1600	2315	2760	3380	3835	4765	*
	1500	905	1315	1910	2300	2800	3175	3955	4460
	1000	600	865	1260	1510	1840	2080	2600	2935
10:1	1800	985	1430	2070	2490	3015	3425	4225	4815
	1500	805	1175	1710	2060	2495	2840	3505	3980
	1000	535	770	1130	1350	1630	1870	2305	2620
11,2:1	1800	870	1250	1825	2190	2690	3020	3725	4270
	1500	725	1040	1520	1815	2230	2490	3090	3530
	1000	475	685	995	1200	1465	1640	2030	2325
12,5:1	1800	790	1150	1615	1895	2385	2625	3320	3795
	1500	660	960	1330	1565	1975	2175	2740	3135
	1000	430	630	880	1025	1300	1425	1800	2065
14:1	1800	700	1005	1435	1680	2155	2365	2950	3370
	1500	585	825	1195	1390	1780	1960	2435	2785
	1000	380	545	785	920	1170	1290	1600	1835
16:1	1800	605	885	1260	1485	1905	2090	2550	2780
	1500	495	735	1040	1230	1580	1730	2115	2390
	1000	330	485	685	805	1040	1140	1395	1630
18:1	1800	525	755	1095	1250	1600	1825	2075	2540
	1500	430	630	905	1045	1325	1515	1720	2095
	1000	285	415	595	685	870	995	1130	1380
20:1	1800	475	660	975	1155	1420	1615	1880	2215
	1500	385	540	805	955	1175	1340	1550	1830
	1000	255	360	530	630	775	880	1025	1205

* Ratings on request

Pressure lubrication required

Selection table for Helical Gearboxes

SEL-2000, LE-2000

Nominal torque rating

i	n_1	2315	2355	2400	2425	2450	2475	2500	2530
		T_{2N}	T_{2N}	T_{2N}	T_{2N}	T_{2N}	T_{2N}	T_{2N}	T_{2N}
	1/min	kNm	kNm	kNm	kNm	kNm	kNm	kNm	kNm
5,6:1	1800	47	62	92	114	126	134	*	*
	1500	49	64	95	118	131	139	170	*
	1000	53	69	103	127	141	149	183	223
6,3:1	1800	52	70	104	131	143	152	*	*
	1500	53	72	108	135	147	157	192	*
	1000	52	78	112	134	156	170	207	252
7,1:1	1800	51	74	107	129	154	171	*	*
	1500	51	74	106	129	153	177	208	*
	1000	50	73	105	127	151	176	209	248
8:1	1800	51	74	107	129	154	178	*	*
	1500	51	74	106	128	153	178	212	*
	1000	50	73	104	126	151	175	209	247
9:1	1800	51	74	106	128	153	178	212	*
	1500	50	73	105	128	152	177	211	249
	1000	50	72	104	126	150	174	208	246
10:1	1800	51	74	106	128	153	177	211	250
	1500	50	73	105	127	152	176	210	248
	1000	50	72	104	125	149	174	207	245
11,2:1	1800	50	73	105	127	152	177	210	249
	1500	50	73	105	126	151	175	209	247
	1000	49	72	103	125	149	173	206	244
12,5:1	1800	50	73	105	127	151	176	210	248
	1500	50	73	104	126	150	175	208	246
	1000	49	72	103	124	148	172	205	243
14:1	1800	50	73	104	126	151	175	209	247
	1500	50	72	104	125	150	174	207	245
	1000	49	71	102	124	148	172	204	242
16:1	1800	50	72	104	126	150	174	207	228
	1500	49	72	103	125	149	173	206	235
	1000	49	71	102	123	147	171	204	241
18:1	1800	48	69	100	119	142	167	193	233
	1500	47	69	99	119	141	166	192	231
	1000	47	68	98	117	139	164	189	228
20:1	1800	48	69	100	119	141	166	193	232
	1500	47	68	99	118	140	165	191	230
	1000	47	68	98	117	139	163	189	227

* Ratings on request

Pressure lubrication required

Selection table for Helical Gearboxes SF-3000

i	n_1	3080		3090		3100		3112		3125		3140		3160		3180		3200	
		P_{1N}	R_1	P_{1N}	R_1	P_{1N}	R_1	P_{1N}	R_1	P_{1N}	R_1	P_{1N}	R_1	P_{1N}	R_1	P_{1N}	R_1	P_{1N}	R_1
	1/min	kW	kN	kW	kN	kW	kN	kW	kN	kW	kN	kW	kN	kW	kN	kW	kN	kW	kN
22,4:1	1500	4,7	0,66	5,3	1,5	7,8	1,4	13	1,9	18,5	2,6	29	1,9	42	3,0	57	4,2	89	3,1
	1000	3,4	0,78	4	1,5	5,9	1,4	8,5	2,3	13,5	3,1	19,5	2,5	28,5	3,8	41	5,0	59	4,5
	750	2,65	0,90	3,2	1,5	4,8	1,4	6,4	2,3	10	3,4	14,5	3,1	21,5	4,5	31	5,9	44	5,5
25:1	1500	4,3	0,73	4,9	1,5	7,2	1,4	11,5	2,1	17,5	2,8	26	2,2	38	3,4	53	4,5	79	3,9
	1000	3,1	0,86	3,7	1,5	5,4	1,4	7,8	2,3	12,5	3,2	17,5	2,9	25,5	4,3	37	5,5	53	5,1
	750	2,35	1,0	3	1,5	4,4	1,4	5,8	2,3	9	3,4	13	3,2	19	4,8	28	6,4	40	6,1
28:1	1500	4	0,78	4,5	1,5	6,7	1,5	10	2,3	15,5	3,0	23,5	2,5	34	3,8	49	4,9	70	4,6
	1000	2,8	0,94	3,4	1,5	5	1,4	6,8	2,3	11	3,5	15,5	3,2	23	4,6	33	6,0	47	5,8
	750	2,1	1,1	2,75	1,5	4	1,4	5	2,3	8	3,5	11,5	3,3	17	4,9	24,5	6,9	35	6,9
31,5:1	1500	3,7	0,84	4	1,6	6,2	1,5	9	2,4	14	3,2	20,5	2,8	30	4,2	44	5,3	61	5,3
	1000	2,6	1,0	3,1	1,5	4,6	1,5	6	2,4	10	3,6	14	3,4	20,5	5,0	29	6,5	41	6,5
	750	1,95	1,2	2,55	1,5	3,8	1,4	4,5	2,4	7,2	3,6	10,5	3,4	15	5,0	22	7,0	31	7,5
35,5:1	1500	3,3	0,75	3,9	1,5	5,6	1,5	8	2,2	13	2,9	18	2,6	27	3,8	40	4,7	57	4,4
	1000	2,25	0,93	2,9	1,5	4,2	1,4	5,5	2,3	9	3,5	12	3,3	18	4,7	26,5	6,0	38	5,7
	750	1,7	1,1	2,4	1,5	3,3	1,4	4	2,3	6,6	3,5	9	3,4	13,5	5,0	20	6,9	28,5	6,7
40:1	1500	3	0,82	3,5	1,6	5,2	1,5	7,2	2,4	11,5	3,1	16	2,9	24	4,1	35	5,3	50	5,1
	1000	2	1,0	2,65	1,5	3,9	1,5	4,8	2,4	7,7	3,6	11	3,4	16	5,0	23,5	6,4	34	6,3
	750	1,5	1,2	2,15	1,5	2,95	1,5	3,6	2,4	5,8	3,6	8	3,4	12	5,0	17,5	7,1	25	7,4
45:1	1500	2,75	0,88	3,2	1,6	4,8	1,5	6,4	2,4	10	3,4	14,5	3,1	21,5	4,4	31	5,7	44	5,7
	1000	1,85	1,1	2,45	1,5	3,5	1,5	4,3	2,4	6,8	3,6	9,5	3,5	14,5	5,1	20,5	6,9	29,5	6,9
	750	1,4	1,2	1,9	1,5	2,65	1,5	3,2	2,4	5	3,6	7,2	3,5	11	5,1	15,5	7,2	22	8,0
50:1	1500	2,35	0,80	3,1	1,5	4,3	1,5	6	2,3	9	3,1	13	2,7	18,5	4,1	26	5,4	41	4,7
	1000	1,6	0,98	2,25	1,5	2,9	1,5	4	2,4	6	3,6	9	3,4	12,5	5,0	17,5	6,5	27	6,1
	750	1,2	1,1	1,7	1,5	2,25	1,5	3	2,4	4,6	3,6	6,5	3,4	9,5	5,0	13,5	7,1	20,5	7,0
56:1	1500	2,1	0,88	2,8	1,6	4	1,5	5,3	2,4	8	3,3	11,5	3,0	17	4,3	24,5	5,6	36	5,4
	1000	1,4	1,1	2	1,5	2,7	1,5	3,5	2,4	5,5	3,6	7,8	3,5	11,5	5,1	16,5	6,8	24	6,7
	750	1,05	1,2	1,5	1,5	2	1,5	2,65	2,4	4	3,6	5,8	3,5	8,6	5,1	12,5	7,1	18	7,7
63:1	1500	1,95	0,92	2,55	1,6	3,7	1,5	4,7	2,4	7,2	3,5	10,5	3,2	15	4,7	22	6,0	31	6,0
	1000	1,3	1,1	1,8	1,6	2,45	1,5	3,1	2,4	4,8	3,7	6,9	3,6	10	5,2	14,5	7,2	21	7,2
	750	0,97	1,3	1,35	1,6	1,85	1,5	2,35	2,4	3,6	3,7	5,2	3,6	7,6	5,2	11	7,2	15,5	8,2
71:1	1500	1,7	1,0	2,35	1,6	3,3	1,5	4,2	2,4	6,4	3,6	9	3,4	13,5	4,9	19,5	6,3	28,5	6,3
	1000	1,1	1,2	1,6	1,6	2,2	1,5	2,8	2,4	4,3	3,7	6	3,6	9	5,2	13	7,3	19	7,6
	750	0,84	1,4	1,2	1,6	1,65	1,5	2,1	2,4	3,2	3,7	4,6	3,6	6,8	5,2	10	7,3	14	8,2
80:1	1500	1,3	0,12	1,85	0,93	2,7	1,2	3,6	1,4	5	2,3	7,5	2,3	11	3,1	15	4,0	25,5	2,7
	1000	0,96	0,16	1,25	1,1	1,85	1,2	2,4	1,4	3,5	2,3	5	2,3	7,3	3,7	10	4,9	17	3,6
	750	0,73	0,22	0,95	1,3	1,4	1,2	1,8	1,4	2,65	2,3	3,8	2,3	5,6	3,7	7,6	5,5	12,5	4,3
90:1	1500	1,3	0,12	1,85	0,93	2,65	1,2	3,2	1,5	5	2,3	7,2	2,3	11	3,1	15	4,0	23	3,1
	1000	0,88	0,21	1,25	1,1	1,75	1,2	2,15	1,5	3,4	2,3	4,8	2,3	7,2	3,7	10	4,9	15,5	3,9
	750	0,66	0,28	0,93	1,3	1,35	1,2	1,6	1,5	2,55	2,3	3,6	2,3	5,4	3,7	7,6	5,5	11,5	4,7
100:1	1500	1,2	0,16	1,5	1,0	2,35	1,2	2,9	1,5	4,6	2,4	6,5	2,3	9	3,5	12,5	4,5	19	3,7
	1000	0,79	0,26	0,99	1,3	1,55	1,2	1,95	1,5	3,1	2,4	4,3	2,3	6	3,8	8	5,4	12,5	4,7
	750	0,59	0,33	0,74	1,3	1,15	1,2	1,45	1,5	2,3	2,4	3,2	2,3	4,5	3,8	6,2	5,7	9,5	5,3

	i	3080	3090	3100	3112	3125	3140	3160	3180	3200
T_{2N}[kNm]	50:1	0,7	0,9	1,4	1,8	2,8	3,9	5,8	8,0	12,2

R_1 allowable radial load in the middle of the input shaft extension (selection factor $K_{SF} \geq 1,25$) ..... [kN]

If the gearbox is subjected to low or moderate external forces, gearboxes without a reinforced low speed shaft can be used in agitator applications. See more information in the Kumera Helical and Bevel Gearboxes catalogue.

Selection table for Helical Gearboxes SG-3000

i	n_1	3225		3250		3280		3315		3355		3400	
		P_{1N}	R_1	P_{1N}	R_1	P_{1N}	R_1	P_{1N}	R_1	P_{1N}	R_1	P_{1N}	R_1
	1/min	kW	kN	kW	kN	kW	kN	kW	kN	kW	kN	kW	kN
22,4:1	1500	125	5,7	185	5,0	260	5,8	360	7,4	530	7,4	760	6,5
	1000	85	7,1	125	6,5	175	7,8	235	10	350	11	510	10
	750	64	8,2	92	7,9	130	9,4	180	12	265	13	380	14
25:1	1500	115	5,8	165	5,3	225	6,4	330	7,5	480	7,8	690	7,0
	1000	78	7,1	110	6,9	150	8,4	220	10	320	11	460	11
	750	58	8,3	83	8,2	115	10	165	12	240	13	340	15
28:1	1500	105	5,8	150	5,4	205	6,7	295	7,9	430	8,3	620	7,8
	1000	68	7,5	99	7,1	135	8,7	195	11	285	11	410	12
	750	51	8,4	74	8,4	100	10	145	13	215	14	310	15
31,5:1	1500	91	6,2	135	5,6	185	6,9	265	8,3	380	9,0	560	8,2
	1000	61	7,6	90	7,2	120	8,9	175	11	255	12	370	12
	750	46	8,5	67	8,6	92	11	130	13	190	14	280	15
35,5:1	1500	81	6,3	120	5,8	165	7,2	235	8,6	340	9,3	490	9,3
	1000	54	7,8	79	7,5	110	9,2	155	11	230	12	320	14
	750	41	8,5	60	8,7	81	11	115	13	170	15	245	16
40:1	1500	71	6,5	105	6,1	145	7,4	205	9,1	300	9,8	430	10
	1000	48	8,0	70	7,7	96	9,5	140	11	200	13	285	14
	750	36	8,6	52	9,1	72	11	105	13	150	15	215	17
45:1	1500	64	6,6	93	6,3	125	7,8	185	9,2	270	10	390	10
	1000	43	8,1	62	7,9	84	9,8	120	12	180	13	260	14
	750	32	8,6	46	9,3	63	11	91	14	135	15	195	17
50:1	1500	56	7,2	81	7,1	110	8,7	160	11	240	12	350	12
	1000	38	8,6	54	8,8	74	11	105	13	160	15	230	17
	750	28	8,8	41	10	55	12	80	15	120	17	175	19
56:1	1500	50	7,7	73	7,7	100	9,3	145	12	210	13	310	14
	1000	33	8,9	49	9,3	68	11	98	14	140	16	205	19
	750	25	8,9	36	11	51	13	74	16	105	18	155	22
63:1	1500	45	8,1	62	8,4	88	10	135	12	185	14	275	16
	1000	30	8,9	41	10	59	12	89	15	125	17	185	20
	750	22,5	8,9	31	11	44	14	67	17	92	20	140	23
71:1	1500	41	4,6	56	6,6	105	8,3	120	12	160	18	245	20
	1000	27,5	4,6	38	6,6	53	9,2	79	12	110	20	165	24
	750	20,5	4,6	28	6,6	40	9,2	59	12	81	20	125	25
80:1	1500	36	4,7	51	6,6	69	9,3	105	12	145	18	210	21
	1000	24	4,7	34	6,6	46	9,3	70	12	95	20	140	24
	750	18	4,7	25,5	6,6	34	9,3	53	12	71	20	105	25
90:1	1500	32	4,7	45	6,7	61	9,4	93	12	125	19	185	21
	1000	21,5	4,7	29,5	6,7	41	9,4	62	12	84	21	125	25
	750	16	4,7	22,5	6,7	31	9,4	46	12	63	21	92	26
100:1	1500	28,5	4,8	39	6,8	53	9,5	82	12	110	19	170	22
	1000	19	4,8	26	6,8	35	9,5	54	12	74	21	115	25
	750	14,5	4,8	19,5	6,8	26,5	9,5	41	12	56	21	85	26

Pressure lubrication required

	i	3225	3250	3280	3315	3355	3400
T_{2N}[kNm]	50:1	17,5	25,5	35	50	71	100

R_1 allowable radial load in the middle of the input shaft extension (selection factor $K_{SF} \geq 1,5$) ..... [kN]

If the gearbox is subjected to low or moderate external forces, gearboxes without a reinforced low speed shaft can be used in agitator applications. See more information in the Kumera Helical and Bevel Gearboxes catalogue.

Selection table for E-series Gearboxes

E-3000

i	n_1	3315	3355	3400	3425	3450	3475	3500	3530	3560	3600	3630	3670	3710	3750	3800	3850	3900
		P_{1N}	P_{1N}	P_{1N}	P_{1N}	P_{1N}	P_{1N}	P_{1N}	P_{1N}	P_{1N}	P_{1N}	P_{1N}	P_{1N}	P_{1N}	P_{1N}	P_{1N}	P_{1N}	P_{1N}
	1/min	kW	kW	kW	kW	kW	kW	kW	kW	kW	kW	kW	kW	kW	kW	kW	kW	kW
22,4:1*	1800	435	605	895	1055	1295	1475	1860	2125	2490	3030	3300	4140	4870	5680	7310	8360	9710
	1500	365	505	745	880	1080	1230	1550	1770	2070	2520	2750	3450	4060	4730	6090	6970	8090
	1000	245	335	500	585	720	820	1030	1180	1380	1680	1830	2300	2710	3150	4060	4650	5390
25:1*	1800	390	545	805	940	1165	1320	1585	1870	2170	2700	2970	3680	4480	5270	6710	7500	8740
	1500	325	455	670	785	970	1100	1320	1560	1810	2250	2470	3070	3730	4390	5590	6250	7280
	1000	215	300	450	525	645	735	880	1040	1200	1500	1650	2050	2490	2930	3730	4160	4860
28:1	1800	350	485	725	845	1035	1175	1445	1675	1940	2390	2650	3370	4080	4760	6000	6690	7830
	1500	290	405	600	705	865	975	1205	1395	1620	2000	2210	2810	3400	3970	5000	5570	6530
	1000	195	270	400	470	575	650	800	930	1080	1330	1470	1870	2270	2650	3330	3720	4350
31,5:1	1800	315	435	640	750	925	1035	1280	1480	1730	2160	2350	3020	3630	4300	5320	6030	6990
	1500	260	360	530	625	770	860	1065	1230	1450	1800	1960	2520	3020	3590	4430	5030	5820
	1000	175	240	355	415	515	575	710	820	960	1200	1310	1680	2010	2390	2950	3350	3880
35,5:1*	1800	265	385	565	675	830	915	1130	1315	1540	1900	2100	2650	3200	3810	4690	5260	6190
	1500	220	320	470	560	695	765	940	1095	1280	1590	1750	2210	2670	3170	3910	4380	5160
	1000	150	215	315	375	460	510	625	730	850	1060	1170	1470	1780	2120	2600	2920	3440
40:1*	1800	240	340	515	605	750	810	1045	1165	1350	1640	1880	2310	2840	3390	4170	4690	5710
	1500	200	285	430	505	625	675	870	970	1130	1360	1560	1920	2370	2830	3470	3910	4760
	1000	135	190	285	335	415	450	580	645	750	910	1040	1280	1580	1880	2320	2610	3170
45:1	1800	215	305	435	535	665	715	905	1035	1210	1460	1680	2090	2530	3010	3750	4180	5060
	1500	175	250	360	445	555	595	755	860	1010	1220	1400	1740	2110	2510	3120	3480	4220
	1000	120	170	240	295	370	395	505	575	670	810	940	1160	1400	1670	2080	2320	2810
50:1	1800	195	280	385	460	590	620	805	925	1080	1300	1550	1850	2330	2680	3300	3650	4450
	1500	160	235	320	385	490	520	670	770	900	1080	1300	1540	1940	2230	2750	3040	3710
	1000	110	155	215	255	330	345	445	515	600	720	860	1030	1290	1490	1840	2030	2470
56:1	1800	170	245	345	410	530	565	715	820	970	1160	1370	1680	2030	2390	2920	3330	4150
	1500	145	205	285	340	445	470	600	685	810	960	1140	1400	1690	1990	2430	2780	3460
	1000	95	135	190	225	295	315	400	455	540	640	760	930	1130	1330	1620	1850	2310
63:1	1800	155	210	305	365	460	505	635	715	850	1020	1220	1490	1760	2130	2590	2990	3640
	1500	130	175	255	300	385	420	530	595	710	850	1020	1240	1470	1770	2160	2490	3040
	1000	85	115	170	200	255	280	350	395	470	570	680	830	980	1180	1440	1660	2020
71:1	1800	135	190	280	325	410	450	555	650	760	940	1090	1320	1590	1860	2310	2670	3200
	1500	115	155	235	270	345	375	460	540	630	780	900	1100	1330	1550	1930	2220	2670
	1000	75	105	155	180	230	250	310	360	420	520	600	730	880	1030	1290	1480	1780
80:1	1800	115	160	245	275	345	390	450	550	640	800	980	1120	1270	1500	1930	2160	2600
	1500	98	135	205	230	285	325	375	460	530	670	820	930	1060	1250	1610	1800	2160
	1000	65	90	135	155	190	215	250	305	350	450	550	620	710	840	1070	1200	1440
90:1	1800	100	145	210	245	305	350	390	490	560	720	860	970	1130	1320	1720	1870	2280
	1500	85	120	175	205	255	290	325	410	470	600	720	810	940	1100	1430	1560	1900
	1000	57	80	120	135	170	195	220	275	310	400	480	540	630	730	950	1040	1270
100:1	1800	92	125	190	225	275	310	355	430	500	640	750	860	990	1170	1520	1730	2020
	1500	76	105	155	190	230	260	295	360	420	530	630	720	830	980	1270	1440	1680
	1000	51	69	105	125	150	170	195	240	280	360	420	480	550	650	850	960	1120

* Ratings for bevel-helical gearboxes on request

Pressure lubrication required

Selection table for E-series Gearboxes E-3000

Nominal torque rating

i	3315	3355	3400	3425	3450	3475	3500	3530	3560	3600	3630	3670	3710	3750	3800	3850	3900
	T_{2N}	T_{2N}	T_{2N}	T_{2N}	T_{2N}	T_{2N}	T_{2N}	T_{2N}	T_{2N}	T_{2N}	T_{2N}	T_{2N}	T_{2N}	T_{2N}	T_{2N}	T_{2N}	T_{2N}
	kNm	kNm	kNm	kNm	kNm	kNm	kNm	kNm	kNm	kNm	kNm	kNm	kNm	kNm	kNm	kNm	kNm
22,4:1*	49	71	102	123	147	171	204	241	281	358	400	494	564	664	826	976	1160
25:1*	49	71	102	123	147	171	203	240	280	356	400	492	576	678	842	976	1160
28:1	49	71	102	123	146	170	203	240	279	354	398	490	586	694	840	976	1160
31,5:1	49	71	101	122	146	170	202	239	278	354	396	488	584	700	836	976	1160
35,5:1*	48	70	101	122	146	169	201	238	277	352	394	486	582	696	832	976	1160
40:1*	48	70	101	122	145	169	201	237	276	350	394	484	580	694	830	976	1160
45:1	48	70	100	121	145	168	200	236	275	350	392	484	578	692	826	976	1160
50:1	48	70	100	121	144	167	199	236	274	348	392	482	576	690	824	976	1160
56:1	48	70	100	120	144	167	199	235	274	348	390	480	574	688	820	976	1160
63:1	48	69	100	120	144	167	198	234	273	346	390	480	572	686	818	976	1160
71:1	48	69	100	120	143	166	198	234	272	346	388	478	570	684	816	976	1160
80:1	46	66	96	114	135	159	184	222	259	324	376	454	526	632	770	880	1038
90:1	46	66	95	114	135	159	184	221	258	322	376	454	526	630	768	880	1038
100:1	46	66	95	114	135	159	183	221	257	322	374	452	524	630	766	880	1038

* Ratings for bevel-helical gearboxes on request

Pressure lubrication required

Selection table for Helical Gearboxes SF-4000

i	n_1	4125		4140		4160		4180		4200	
		P_{1N}	R_1	P_{1N}	R_1	P_{1N}	R_1	P_{1N}	R_1	P_{1N}	R_1
	1/min	kW	kN	kW	kN	kW	kN	kW	kN	kW	kN
112:1	1500	4	1,6	5,5	1,5	8,4	2,4	12	3,7	17	3,6
	1000	2,7	1,6	3,6	1,5	5,6	2,4	8	3,7	11	3,6
	750	2	1,6	2,8	1,5	4,2	2,4	6	3,7	8,4	3,6
125:1	1500	3,6	1,6	4,9	1,5	7,5	2,4	11	3,7	15	3,6
	1000	2,4	1,6	3,3	1,5	5	2,4	7,2	3,7	10	3,6
	750	1,8	1,6	2,5	1,5	3,8	2,4	5,4	3,7	7,5	3,6
140:1	1500	3,2	1,6	4,4	1,5	6,7	2,4	9,6	3,7	13,5	3,6
	1000	2,2	1,6	2,9	1,5	4,5	2,4	6,4	3,7	9	3,6
	750	1,6	1,6	2,2	1,5	3,4	2,4	4,8	3,7	6,7	3,6
160:1	1500	2,8	1,6	3,8	1,5	5,9	2,4	8,4	3,7	12	3,6
	1000	1,9	1,6	2,6	1,5	3,9	2,4	5,6	3,7	7,9	3,6
	750	1,4	1,6	1,9	1,5	3,0	2,4	4,2	3,7	5,9	3,6
180:1	1500	2,5	1,6	3,4	1,6	5,2	2,4	7,5	3,7	10,5	3,7
	1000	1,7	1,6	2,3	1,6	3,5	2,4	5	3,7	7	3,7
	750	1,3	1,6	1,7	1,6	2,6	2,4	3,8	3,7	5,2	3,7
200:1	1500	2,3	1,6	3,1	1,5	4,7	2,4	6,8	3,7	9,4	3,6
	1000	1,5	1,6	2,1	1,5	3,1	2,4	4,5	3,7	6,3	3,6
	750	1,1	1,6	1,6	1,5	2,4	2,4	3,4	3,7	4,7	3,6
224:1	1500	2	1,6	2,8	1,5	4,2	2,4	6	3,7	8,4	3,6
	1000	1,4	1,6	1,8	1,6	2,8	2,4	4	3,7	5,6	3,6
	750	1	1,6	1,4	1,6	2,1	2,4	3	3,7	4,2	3,6
250:1	1500	1,8	1,6	2,5	1,6	3,8	2,4	5,4	3,7	7,5	3,7
	1000	1,2	1,6	1,7	1,6	2,5	2,4	3,6	3,7	5	3,7
	750	0,90	1,6	1,3	1,6	1,9	2,4	2,7	3,7	3,8	3,7
280:1	1500	1,6	1,6	2,2	1,6	3,4	2,5	4,8	3,8	6,7	3,7
	1000	1,1	1,6	1,5	1,6	2,3	2,5	3,2	3,8	4,5	3,7
	750	0,80	1,6	1,1	1,6	1,7	2,5	2,4	3,8	3,4	3,7
315:1	1500	1,4	1,3	2,0	1,2	3	1,3	4,3	2,4	6	2,4
	1000	0,95	1,3	1,3	1,2	2	1,3	2,9	2,4	4	2,4
	750	0,71	1,3	0,97	1,2	1,5	1,3	2,2	2,4	3	2,4
355:1	1500	1,3	1,3	1,8	1,2	2,7	1,3	3,8	2,4	5,3	2,4
	1000	0,84	1,3	1,2	1,2	1,8	1,3	2,6	2,4	3,5	2,4
	750	0,63	1,3	0,86	1,2	1,4	1,3	1,9	2,4	2,7	2,4
400:1	1500	1,1	1,3	1,6	1,2	2,4	1,3	3,4	2,4	4,7	2,4
	1000	0,75	1,3	1	1,2	1,6	1,3	2,3	2,4	3,1	2,4
	750	0,56	1,3	0,77	1,2	1,2	1,3	1,7	2,4	2,4	2,4

	i	4125	4140	4160	4180	4200
T_{2N} [kNm]	250:1	2,85	3,9	6	8,6	12,2

R_1 allowable radial load in the middle of the input shaft extension (selection factor $K_{sf} \geq 1,25$) ..... [kN]

Selection table for E-series Gearboxes

E-4000

i	n_1	4315	4355	4400	4425	4450	4475	4500	4530	4560	4600	4630	4670	4710	4750	4800	4850	4900
		P_{1N}	P_{1N}	P_{1N}	P_{1N}	P_{1N}	P_{1N}	P_{1N}	P_{1N}	P_{1N}	P_{1N}	P_{1N}	P_{1N}	P_{1N}	P_{1N}	P_{1N}	P_{1N}	P_{1N}
	1/min	kW	kW	kW	kW	kW	kW	kW	kW	kW	kW	kW	kW	kW	kW	kW	kW	kW
112:1	1800	89	130	185	215	285	290	370	420	510	595	710	880	1080	1270	1555	1610	1970
	1500	74	105	155	180	235	240	310	350	425	495	590	735	900	1060	1295	1340	1640
	1000	49	71	100	120	160	160	205	235	285	330	395	490	600	705	865	895	1095
125:1	1800	79	115	160	195	250	265	330	375	460	530	635	790	925	1120	1355	1445	1775
	1500	66	94	135	160	210	220	275	315	380	440	530	655	770	935	1130	1205	1480
	1000	44	63	89	105	140	145	185	210	255	295	355	440	515	625	755	800	985
140:1	1800	72	105	145	170	225	235	300	350	410	475	570	700	840	1005	1215	1290	1590
	1500	60	86	120	145	190	195	250	290	340	395	475	585	700	835	1015	1075	1325
	1000	40	57	81	95	125	130	165	195	230	265	315	390	465	555	675	715	885
160:1	1800	65	92	130	155	200	210	265	300	365	425	505	620	750	885	1085	1160	1420
	1500	54	77	105	130	170	175	220	250	305	355	420	515	625	740	905	970	1180
	1000	36	51	71	86	110	115	150	170	205	235	280	345	415	490	605	645	790
180:1	1800	57	79	115	135	175	185	240	270	320	380	455	550	660	790	965	1030	1275
	1500	48	66	95	115	145	155	200	225	270	315	380	455	550	660	805	860	1065
	1000	32	44	64	76	98	105	130	150	180	210	250	305	365	440	535	575	710
200:1	1800	50	72	100	120	155	170	210	235	295	340	415	485	610	700	850	890	1140
	1500	42	60	84	100	130	140	175	195	245	285	345	405	510	585	710	740	950
	1000	28	40	56	68	87	93	115	130	165	190	230	270	340	390	475	495	630
224:1	1800	45	62	93	110	135	150	185	215	250	310	360	430	520	620	765	825	985
	1500	37	52	78	91	115	125	155	180	210	260	300	360	435	515	640	685	820
	1000	24.8	35	52	61	76	83	100	120	140	175	200	240	290	345	425	460	545
250:1	1800	39	57	83	97	120	135	165	190	230	275	325	380	480	550	675	710	880
	1500	33	47	69	81	100	110	135	155	190	230	275	320	400	455	565	595	730
	1000	21.7	32	46	54	68	75	90	105	125	155	180	210	265	305	375	395	490
280:1	1800	35	50	74	84	110	115	145	165	195	245	290	340	420	490	605	635	790
	1500	28.8	42	62	70	91	97	120	140	160	205	240	280	350	405	505	530	660
	1000	19.2	27.9	41	47	60	64	80	93	110	135	160	190	230	270	335	355	440
315:1	1800	31	45	66	74	97	105	125	150	175	220	250	305	370	425	530	565	705
	1500	26.2	37	55	62	81	85	105	125	145	185	210	250	310	355	440	470	590
	1000	17.5	24.8	37	41	54	57	70	82	95	120	140	170	205	235	295	315	390
355:1	1800	28	40	58	69	86	92	115	135	160	195	225	270	325	390	475	520	630
	1500	23.3	33	48	57	71	76	94	115	130	165	185	225	270	325	395	435	525
	1000	15.6	22.1	32	38	48	51	63	76	88	110	125	150	180	215	265	290	350
400:1	1800	24.2	34	50	58	72	80	92	115	135	170	205	230	260	315	395	430	535
	1500	20.2	28	42	49	60	67	76	96	110	140	170	190	215	260	330	355	445
	1000	13.5	18.6	28	32	40	44	51	64	74	93	115	125	145	175	220	240	295
450:1	1800	21	29.8	44	52	64	71	80	105	120	150	180	200	230	275	350	370	470
	1500	17.5	24.8	36	43	53	59	67	86	99	125	150	165	190	230	290	310	390
	1000	11.7	16.6	24.3	28.8	35	39	44	57	66	84	99	110	130	155	195	205	260
500:1	1800	18.9	26	39	48	57	63	72	90	105	135	155	175	200	245	310	340	415
	1500	15.8	21.7	32	40	48	53	60	75	88	110	130	150	170	205	260	285	345
	1000	10.5	14.5	21.6	26.5	32	35	40	50	59	75	87	98	110	135	175	190	230
560:1	1800	16.9	24.3	35	42	51	57	67	81	98	120	140	160	180	220	275	310	385
	1500	14.1	20.2	29	35	43	48	56	67	82	100	115	130	150	185	230	255	320
	1000	9.4	13.5	19.3	23.4	28.4	32	37	45	54	67	77	88	100	125	155	170	215
630:1	1800	15.2	22	32	38	46	51	63	72	88	105	125	145	165	195	255	275	340
	1500	12.7	18.3	26.8	32	38	43	52	60	73	89	105	120	140	165	210	230	285
	1000	8.4	12.2	17.9	21.1	25.5	28.4	35	40	49	59	69	79	93	110	140	155	190

Pressure lubrication required

Selection table for E-series Gearboxes E-4000

Nominal torque rating

i	4315	4355	4400	4425	4450	4475	4500	4530	4560	4600	4630	4670	4710	4750	4800	4850	4900
	T_{2N}	T_{2N}	T_{2N}	T_{2N}	T_{2N}	T_{2N}	T_{2N}	T_{2N}	T_{2N}	T_{2N}	T_{2N}	T_{2N}	T_{2N}	T_{2N}	T_{2N}	T_{2N}	T_{2N}
	kNm	kNm	kNm	kNm	kNm	kNm	kNm	kNm	kNm	kNm	kNm	kNm	kNm	kNm	kNm	kNm	kNm
112:1	50	73	104	125	150	174	207	244	284	360	406	498	596	714	850	933	1108
125:1	50	72	104	125	149	173	206	244	284	360	404	498	594	712	848	933	1108
140:1	50	72	104	125	149	173	206	243	283	360	404	496	592	710	846	933	1108
160:1	50	72	103	125	149	173	206	243	283	358	402	496	592	708	844	933	1108
180:1	50	72	103	124	149	173	205	242	282	358	402	494	590	706	842	933	1108
200:1	50	72	103	124	148	172	205	242	282	358	402	494	590	706	840	933	1108
224:1	49	72	103	124	148	172	205	242	281	358	400	492	588	704	840	933	1108
250:1	49	72	103	124	148	172	204	241	281	356	400	492	588	702	838	933	1108
280:1	49	72	103	124	148	172	204	241	280	356	400	490	586	702	836	933	1108
315:1	49	72	103	124	148	171	204	241	280	356	398	490	586	700	834	933	1108
355:1	49	72	103	124	147	171	203	240	279	356	398	490	584	700	834	933	1108
400:1	47	68	99	118	139	164	189	228	266	332	386	466	540	648	788	854	1038
450:1	47	68	98	118	139	164	189	228	266	332	386	466	540	648	786	854	1038
500:1	47	68	98	118	139	164	189	227	265	332	386	464	538	646	786	854	1038
560:1	47	68	98	117	139	164	189	227	265	332	384	464	538	646	784	854	1038
630:1	47	68	98	117	139	163	189	227	265	330	384	464	538	646	784	854	1038

Pressure lubrication required

Selection table for Bevel-Helical Gearboxes UF-3000

i	n_1	3080		3090		3100		3112		3125		3140		3160		3180		3200	
		P_{1N}	R_1	P_{1N}	R_1	P_{1N}	R_1	P_{1N}	R_1	P_{1N}	R_1	P_{1N}	R_1	P_{1N}	R_1	P_{1N}	R_1	P_{1N}	R_1
	1/min	kW	kN	kW	kN	kW	kN	kW	kN	kW	kN	kW	kN	kW	kN	kW	kN	kW	kN
11,2:1	1500	4,8	2,5	7,2	2,7	10	4,3	16,5	6,3	27,5	6,7	36	9,4	56	10	71	12	145	8,5
	1000	3,6	2,8	5,5	3,1	7,6	4,9	12,5	6,5	21	7,5	27	11	42	12	54	14	96	12
	750	2,95	2,7	4,5	3,3	6,2	5,3	10	6,5	17	8,3	22	12	35	13	44	15	72	15
12,5:1	1500	4,8	2,5	7,2	2,7	10	4,3	16,5	6,3	27	6,8	35	9,6	55	11	70	12	145	8,5
	1000	3,6	2,8	5,4	3,1	7,6	4,9	12,5	6,5	20,5	7,7	26,5	11	42	12	53	14	96	12
	750	2,95	2,7	4,4	3,3	6,2	5,3	10	6,5	16,5	8,5	21,5	12	34	13	43	15	72	15
14:1	1500	4,7	2,5	7,2	2,7	9,9	4,3	16	6,3	26	7,0	34	9,7	54	11	68	13	145	8,5
	1000	3,6	2,8	5,4	3,1	7,5	4,9	12	6,5	19,5	8,0	26	11	40	12	51	14	96	12
	750	2,9	2,7	4,4	3,3	6	5,3	10	6,5	15,5	8,9	21	12	33	13	42	16	72	15
16:1	1500	4,6	2,5	7	2,7	9,9	4,3	16	6,3	24,5	7,4	32	9,8	50	11	63	14	130	11
	1000	3,5	2,8	5,3	3,1	7,4	4,9	12	6,5	18	8,5	24,5	11	38	13	48	15	86	14
	750	2,85	2,7	4,4	3,3	6	5,3	9	6,5	14	9,4	20	12	31	14	39	17	64	17
18:1	1500	4,6	2,5	7	2,7	10	4,3	16	6,3	23	7,6	30	9,9	47	12	60	14	115	13
	1000	3,5	2,8	5,3	3,1	7,3	4,9	11	6,5	16,5	8,6	22,5	11	36	13	45	16	76	16
	750	2,8	2,8	4,3	3,3	6	5,3	8	6,5	13	9,4	18	12	27,5	15	37	17	57	19
20:1	1500	4,4	2,6	6,9	2,7	9,6	4,3	14,5	6,4	21	7,7	28,5	9,9	44	12	55	14	100	15
	1000	3,3	2,8	5	3,1	7,2	4,9	9,6	6,5	15	8,7	21,5	11	33	14	42	16	68	18
	750	2,7	2,8	4	3,4	5,8	5,3	7,2	6,5	11,5	9,6	16	12	24,5	15	34	17	51	21
22,4:1	1500	4,2	2,6	6,3	2,7	9	4,3	12,5	6,5	19	7,8	26	10	41	12	51	14	89	16
	1000	3,1	2,8	4,8	3,1	6,7	4,9	8,5	6,5	13,5	8,8	19	11	29	14	39	16	59	19
	750	2,55	2,8	3,8	3,4	5,2	5,3	6,4	6,5	10	9,7	14,5	12	22	15	31	17	44	21
25:1	1500	3,3	2,2	5	2,7	7	2,9	11	6,5	17	6,0	22,5	7,6	35	8,8	44	12	77	10
	1000	2,5	2,3	3,8	3,1	5,3	3,3	7,5	6,5	12	6,5	16,5	8,8	24,5	11	33	13	51	14
	750	2	2,3	3,1	3,3	4,3	3,6	5,6	6,5	9	6,5	12,5	10	18,5	12	27	15	38	16
28:1	1500	3,1	2,3	4,7	2,7	6,7	3,0	9,9	6,5	15	6,5	21	8,1	32	9,5	41	12	68	12
	1000	2,35	2,3	3,6	3,1	5	3,3	6,6	6,6	10,5	6,5	15	9,3	22	11	31	14	45	15
	750	1,9	2,3	2,9	3,4	4	3,6	5	6,6	7,9	6,5	11	10	16,5	13	24	16	34	18
31,5:1	1500	2,95	2,3	4,4	2,7	6,2	3,0	9	6,6	13,5	6,5	19,5	8,3	29,5	10	38	13	59	14
	1000	2,25	2,3	3,3	3,1	4,7	3,3	5,8	6,6	9	6,5	13	9,5	19,5	12	28	15	40	17
	750	1,85	2,3	2,6	3,4	3,6	3,7	4,4	6,6	7	6,5	10	10	15	13	21	16	29,5	19
35,5:1	1500	2,55	2,2	3,8	2,7	5,4	3,0	8	6,5	13	6,3	17,5	7,7	27	8,6	35	11	56	10
	1000	1,9	2,3	2,9	3,1	4	3,4	5,5	6,6	9	6,5	12	9,3	18	11	26	13	37	14
	750	1,55	2,3	2,35	3,3	3,3	3,7	4	6,6	6,6	6,5	9	10	13,5	12	19,5	15	28	16
40:1	1500	2,4	2,3	3,6	2,7	5	3,0	7,3	6,6	11,5	6,5	16,5	8,1	24	9,5	32	12	49	12
	1000	1,8	2,3	2,7	3,1	3,8	3,4	4,9	6,6	7,8	6,5	11	9,5	16	12	23,5	14	33	16
	750	1,45	2,3	2,15	3,4	2,95	3,7	3,6	6,6	5,8	6,5	8	10	12	13	17,5	16	24,5	18
45:1	1500	2,3	2,2	3,3	2,6	4,8	3,0	6,4	6,6	10,5	6,6	14,5	8,4	21,5	10	30	13	43	14
	1000	1,7	2,3	2,5	3,0	3,5	3,4	4,3	6,6	6,9	6,6	9,6	9,6	14,5	12	20,5	15	29	17
	750	1,4	2,3	1,9	3,3	2,65	3,7	3,2	6,6	5	6,6	7,2	10	11	13	15,5	16	21,5	19
50:1	1500	1,85	2,2	2,8	2,7	3,5	2,6	5,8	2,2	9	6,3	12,5	5,7	16,5	6,7	23,5	8,4	39	8,9
	1000	1,4	2,3	2	3,0	2,6	2,6	3,9	2,8	6,2	6,6	8	6,5	11	8,6	15,5	11	26	12
	750	1,1	2,3	1,55	3,3	2,15	2,6	2,9	3,4	4,6	6,6	6,2	6,5	8	10	11,5	13	19,5	14
56:1	1500	1,75	2,2	2,6	2,7	3,5	2,6	5	2,5	8	6,6	11	6,5	16,5	6,7	23,5	8,4	34	11
	1000	1,3	2,3	1,95	3,1	2,6	2,6	3,4	3,2	5,5	6,6	7,5	6,5	11	8,6	15,5	11	23	14
	750	1,05	2,3	1,5	3,4	2	2,6	2,55	3,7	4	6,6	5,6	6,5	8	10	11,5	13	17	16
63:1	1500	1,65	2,2	2,45	2,7	3,5	2,6	4,5	2,8	7,2	6,6	9,9	6,6	15	7,4	21,5	9,2	30	12
	1000	1,25	2,3	1,75	3,1	2,45	2,6	3	3,4	4,8	6,6	6,6	6,6	9,9	9,4	14	12	20	15
	750	0,95	2,3	1,3	3,4	1,8	2,6	2,25	3,8	3,6	6,6	4,9	6,6	7,4	10	10,5	14	15	17
71:1	1500	1,55	2,3	2,3	2,7	3,2	2,6	4	3,1	6,4	6,6	9	6,6	13	8,4	19	10	27	13
	1000	1,1	2,3	1,55	3,1	2,15	2,6	2,7	3,5	4,3	6,6	5,9	6,6	9	9,9	12,5	13	18	16
	750	0,82	2,3	1,15	3,4	1,6	2,6	2	3,8	3,2	6,6	4,4	6,6	6,6	10	9,6	14	13,5	17
80:1	1500	1,45	2,3	1,85	2,8	2,85	2,6	3,6	3,1	5,8	6,6	7,9	6,6	11	8,8	15	11	23	14
	1000	0,98	2,3	1,2	3,2	1,9	2,6	2,4	3,5	3,9	6,6	5,3	6,6	7,4	10	10	13	15,5	16
	750	0,73	2,3	0,92	3,5	1,45	2,6	1,8	3,8	2,9	6,6	4	6,6	5,5	10	7,6	14	11,5	18
90:1	1500	1,3	1,9	1,85	2,4	2,2	2,2	3,2	1,6	5,2	2,3	7	1,5	10,5	6,3	15,5	6,9	21,5	9,3
	1000	0,88	2,1	1,25	2,7	1,65	2,2	2,15	2,3	3,4	3,1	4,7	2,3	7	6,6	10	9,2	14,5	12
	750	0,66	2,3	0,94	3,0	1,3	2,2	1,6	2,6	2,6	3,6	3,5	3,0	5,3	6,6	7,6	10	11	14
100:1	1500	1,15	1,9	1,45	2,4	2,2	2,2	2,9	2,0	4,6	2,7	6,3	2,0	8,9	6,6	12	8,9	18,5	11
	1000	0,78	2,1	0,98	2,8	1,55	2,2	1,95	2,6	3,1	3,3	4,2	2,8	5,9	6,6	8	10	12,5	13
	750	0,59	2,4	0,74	3,0	1,15	2,2	1,45	2,6	2,3	3,9	3,2	3,3	4,4	6,6	6	10	9	14

	i	3080	3090	3100	3112	3125	3140	3160	3180	3200
T_{2N}[kNm]	20:1	0,55	0,85	1,2	1,8	2,6	3,4	5,4	6,9	12

R_1 allowable radial load in the middle of the input shaft extension (selection factor $K_{SF} \geq 1,25$) ..... [kN]

If the gearbox is subjected to low or moderate external forces, gearboxes without a reinforced low speed shaft can be used in agitator applications. See more information in the Kumera Helical and Bevel Gearboxes catalogue.

Thermal power ratings for gearboxes

F-series

	Size								
	80	90	100	112	125	140	160	180	200
	P_T	P_T	P_T	P_T	P_T	P_T	P_T	P_T	P_T
2000	12	14	18	22,5	28	36	45	56	68
3000	8	9,5	12	15	19	24	30	37	47

Thermal powers of series F-4000 are always higher than the mechanical powers.

***) Ambient temperature +20 °C, see all factors on the table Thermal Factors, page 22012.**

G-series

i	n_1	Size					
		2225	2250	2280	2315	2355	2400
	1/min	P_T	P_T	P_T	P_T	P_T	P_T
		Without extra cooling *					
5,6-14	1500	127	156	196	248	315	400
	1000	120	148	186	236	299	380
	750	114	141	176	223	284	360
16-20	1500	120	148	186	236	299	380
	1000	114	141	177	224	284	361
	750	108	134	168	212	269	342
		With a fan cooler *					
5,6-14	1500	228	281	353	447	567	720
	1000	217	267	335	425	539	684
	750	205	253	318	402	510	648
16-20	1500	216	267	335	424	539	684
	1000	205	254	318	403	512	650
	750	194	240	302	382	485	616

i	n_1	Size					
		3225	3250	3280	3315	3355	3400
	1/min	P_T	P_T	P_T	P_T	P_T	P_T
		Without extra cooling *					
22,4-45	1500	76	94	118	149	189	240
	1000	72	89	112	142	180	228
	750	68	85	106	134	170	216
50-100	1500	72	89	112	141	180	228
	1000	68	85	106	134	171	217
	750	65	80	101	127	162	205
		With a fan cooler *					
22,4-45	1500	137	169	212	268	340	432
	1000	130	161	201	255	323	410
	750	123	152	191	241	306	389
50-100	1500	130	160	201	255	323	410
	1000	124	152	191	242	307	390
	750	117	144	181	230	291	369

***) Ambient temperature +20 °C, see all factors on the table Thermal Factors, page 22012.**

Thermal power ratings for E-2000 and E-3000 gearboxes

Size		Without extra cooling *		With a fan cooler *	
		i=5,6-14	i=16-20	i=5,6-14	i=16-20
	n_1	P_T	P_T	P_T	P_T
2315	1800	280	255	360	340
	1500	270	250	350	330
	1000	250	230	320	300
2355	1800	360	330	460	430
	1500	350	320	450	410
	1000	320	290	410	380
2400	1800	440	410	570	530
	1500	430	390	550	510
	1000	390	360	510	470
2425	1800	500	460	640	600
	1500	480	450	630	580
	1000	440	410	570	530
2450	1800	550	510	710	660
	1500	530	490	690	640
	1000	490	450	630	590
2475	1800	610	570	800	740
	1500	600	550	770	720
	1000	550	510	710	660
2500	1800	670	620	870	810
	1500	650	600	850	780
	1000	600	560	780	720
2530	1800	760	700	980	910
	1500	730	680	950	880
	1000	670	620	870	810

Size		Without extra cooling		With a fan cooler	
		i=22,4-45	i=50-100	i=22,4-45	i=50-100
	n_1	P_T	P_T	P_T	P_T
3315	1800	185	170	235	225
	1500	175	165	230	215
	1000	165	155	210	200
3355	1800	230	220	300	285
	1500	225	210	290	275
	1000	205	195	270	255
3400	1800	285	270	370	350
	1500	280	260	360	340
	1000	255	240	330	320
3425	1800	330	310	420	400
	1500	320	295	410	390
	1000	290	275	380	360
3450	1800	360	340	470	440
	1500	350	330	450	430
	1000	320	300	420	390
3475	1800	400	380	520	490
	1500	390	370	510	480
	1000	360	340	470	440
3500	1800	440	420	570	540
	1500	430	400	560	520
	1000	390	370	510	480
3530	1800	500	470	640	610
	1500	480	450	630	590
	1000	440	420	570	540
3560	1800	550	510	-**	-**
	1500	530	500	-**	-**
	1000	490	460	-**	-**
3600	1800	620	590	-**	-**
	1500	600	570	-**	-**
	1000	550	520	-**	-**
3630	1800	680	640	-**	-**
	1500	660	620	-**	-**
	1000	610	570	-**	-**
3670	1800	770	730	-**	-**
	1500	750	700	-**	-**
	1000	690	650	-**	-**
3710	1800	860	810	-**	-**
	1500	830	780	-**	-**
	1000	760	720	-**	-**
3750	1800	950	900	-**	-**
	1500	930	870	-**	-**
	1000	850	800	-**	-**
3800	1800	1000*	1000*	-**	-**
	1500	1000*	980	-**	-**
	1000	960	900	-**	-**
3850	1800	1000*	1000*	-**	-**
	1500	1000*	1000*	-**	-**
	1000	1000*	1000*	-**	-**
3900	1800	1000*	1000*	-**	-**
	1500	1000*	1000*	-**	-**
	1000	1000*	1000*	-**	-**

*when power is 1000kW or more, cooling unit always needed
**fan not available in larger sizes, use water- or air-cooled lubrication unit instead, then thermal power is always enough

Thermal powers of series SEL and LE-4000 are always higher than the mechanical powers.
***) Ambient temperature +20 °C, see all factors on the table Thermal Factors, page 22012.**

Exact ratios for Helical Gearboxes SF

i	2080	2090	2100	2112	2125	2140	2160	2180	2200
5,6:1	5,5000	5,6522	5,5652	5,6522	5,7496	5,5833	5,5948	5,8471	5,3899
6,3:1	6,1818	6,2857	6,2857	6,3810	6,4910	6,2727	6,2884	6,5025	6,1843
7,1:1	7,0000	7,1579	7,0526	7,2381	7,3884	7,1000	7,1207	7,4047	7,0424
8:1	7,7778	8,1600	7,7822	8,0136	8,2047	7,8889	7,7778	8,2183	8,0526
9:1	8,6667	8,9474	8,9086	9,0476	9,0789	8,8750	8,9250	8,9474	8,9474
10:1	9,9048	10,000	10,105	10,000	10,000	10,192	10,200	10,000	9,7500
11,2:1	11,368	11,333	11,333	11,333	11,333	11,511	11,368	11,333	10,888
12,5:1	12,706	12,471	12,750	12,471	12,471	12,950	12,706	12,471	12,232
14:1	14,250	14,133	14,133	14,133	14,133	14,389	14,250	14,133	13,845
16:1	15,467	16,000	15,714	16,000	16,000	16,308	16,000	16,000	15,817
18:1	17,846	17,867	17,647	18,000	18,000	18,346	18,000	17,867	17,550
20:1	20,000	20,250	20,000	20,000	20,000	20,385	20,000	20,000	19,750

i	3080	3090	3100	3112	3125	3140	3160	3180	3200
22,4:1	22,737	22,667	22,152	22,667	22,667	22,522	22,737	22,667	21,775
25:1	25,412	24,941	24,920	24,941	24,941	25,337	25,412	24,941	24,464
28:1	28,500	28,267	27,624	28,267	28,267	28,153	28,500	28,267	27,690
31,5:1	30,933	32,000	30,714	32,000	32,000	31,906	32,000	32,000	31,633
35,5:1	35,875	35,333	36,000	35,443	35,333	36,692	36,000	35,333	34,036
40:1	40,235	40,044	39,906	40,168	40,044	40,769	40,375	40,044	38,525
45:1	43,671	45,333	44,370	45,474	45,333	46,205	45,333	45,333	44,012
50:1	50,824	49,882	51,850	48,220	49,882	50,876	50,824	49,882	47,704
56:1	57,000	56,533	57,476	54,649	56,533	56,529	57,000	56,533	53,996
63:1	61,867	64,000	63,905	61,867	64,000	64,066	64,000	64,000	61,685
71:1	71,385	71,467	71,765	69,600	72,000	72,074	72,000	71,467	68,445
80:1	78,523	82,286	78,571	80,000	81,000	81,538	80,000	80,000	76,292
90:1	90,604	91,886	88,235	90,000	91,125	91,731	90,000	89,333	84,653
100:1	101,54	104,14	100,00	100,00	101,25	101,92	100,00	100,00	95,265

i	4125	4140	4160	4180	4200
112:1	113,07	112,62	113,07	113,07	109,22
125:1	128,00	125,22	128,00	128,00	123,78
140:1	141,33	146,77	141,77	141,33	142,35
160:1	160,18	162,69	160,67	160,18	158,17
180:1	181,33	180,89	181,89	181,33	179,26
200:1	199,53	211,39	192,88	199,53	197,38
224:1	226,13	234,32	218,60	226,13	219,31
250:1	256,00	260,53	247,47	256,00	248,55
280:1	285,87	292,58	278,40	288,00	279,62
315:1	329,14	320,33	320,00	324,00	316,33
355:1	367,54	359,73	360,00	364,50	355,88
400:1	416,57	407,69	400,00	405,00	395,42

Exact ratios for Bevel-Helical Gearboxes UF

i	3080	3090	3100	3112	3125	3140	3160	3180	3200
11,2:1	11,368	11,368	11,121	11,368	11,368	11,587	11,200	11,368	10,598
12,5:1	12,660	12,722	12,451	12,722	12,722	13,035	12,473	12,722	12,118
14:1	14,075	14,211	14,360	14,211	14,211	14,484	14,280	14,211	13,464
16:1	16,155	16,105	16,105	16,105	16,105	16,358	15,916	16,105	15,035
18:1	18,056	17,721	18,118	17,721	17,721	18,403	17,788	17,721	16,892
20:1	20,250	20,084	20,084	20,084	20,084	20,448	19,950	20,084	19,119
22,4:1	21,979	22,737	22,331	22,737	22,737	23,174	22,400	22,737	21,842
25:1	26,389	25,773	26,350	25,832	25,832	26,825	26,259	25,832	25,228
28:1	29,596	29,209	29,209	29,276	29,276	29,806	29,450	29,276	28,555
31,5:1	32,123	33,067	32,476	33,143	33,143	33,780	33,067	33,143	32,622
35,5:1	35,186	34,534	35,308	35,144	35,144	36,496	36,000	35,333	34,657
40:1	39,462	39,138	39,138	39,830	39,830	40,551	40,375	40,044	39,228
45:1	42,831	44,308	43,516	45,091	45,091	45,958	45,333	45,333	44,814
50:1	51,801	50,842	51,981	49,882	49,882	53,096	52,094	51,129	50,150
56:1	58,096	57,621	57,621	56,533	56,533	58,995	58,425	57,947	56,765
63:1	63,056	65,231	64,066	64,000	64,000	66,862	65,600	65,600	64,848
71:1	72,757	72,841	71,946	72,000	72,000	75,219	73,800	73,253	71,955
80:1	81,538	82,558	81,538	80,000	80,000	83,577	82,000	82,000	80,975
90:1	87,858	87,959	86,878	90,000	90,000	94,024	92,000	91,567	89,944
100:1	98,462	99,692	98,462	100,00	100,00	104,47	102,22	102,50	101,22

Exact ratios for Helical Gearboxes

SG

i	2225	2250	2280	2315	2355	2400
5,6:1	5,7496	5,7496	5,5833	5,7496	5,4725	5,6580
6,3:1	6,3941	6,1959	6,2727	6,4910	6,1810	6,3905
7,1:1	7,2813	7,0190	7,1000	7,2813	6,9351	7,1702
8:1	7,9248	7,7944	7,8889	8,0858	7,6823	7,9342
9:1	8,8097	8,6940	8,8040	9,0189	8,8863	8,8158
10:1	9,8421	9,7500	9,7239	10,114	9,9657	9,8443
11,2:1	11,062	10,843	11,157	11,248	10,739	11,060
12,5:1	12,526	12,347	12,705	12,809	12,166	12,518
14:1	14,145	13,800	13,845	13,958	13,753	13,929
16:1	16,011	15,717	15,581	15,906	15,673	15,868
18:1	17,447	17,767	17,336	17,354	17,556	17,550
20:1	19,500	20,116	20,189	19,741	19,750	19,041

i	3225	3250	3280	3315	3355	3400
22,4:1	22,506	22,433	21,954	22,884	21,849	22,120
25:1	24,583	24,898	25,104	24,907	24,263	24,577
28:1	27,877	27,758	27,893	27,688	27,063	27,428
31,5:1	31,263	30,643	31,147	30,932	30,350	30,294
35,5:1	35,294	34,594	34,993	34,767	33,752	34,759
40:1	40,035	39,377	39,608	39,368	38,435	39,582
45:1	44,831	44,513	45,248	44,457	42,957	43,133
50:1	50,765	50,689	51,527	50,626	48,663	48,822
56:1	57,326	56,653	56,149	55,167	55,011	53,996
63:1	62,468	64,042	62,476	60,189	61,620	60,080
71:1	68,594	70,200	69,323	68,128	70,178	67,611
80:1	77,928	78,000	79,913	76,143	79,457	78,737
90:1	88,206	88,833	89,931	86,772	90,550	89,700
100:1	98,583	100,58	104,73	98,704	101,87	97,322

Exact ratios for Helical Gearboxes

SEL, LE

i	2315	2355	2400	2425	2450	2475	2500	2530
5.6:1	5,7481	5,4742	5,4769	5,5460	5,7481	5,7403	5,6520	5,6690
6.3:1	6,3929	6,1823	6,1854	6,3640	6,4885	6,5184	6,3800	6,4023
7.1:1	7,1637	6,9356	6,9392	7,1300	7,0275	7,3332	6,9000	7,1825
8:1	7,9562	8,0957	7,9335	7,9535	7,8048	8,2080	7,6659	7,8982
9:1	8,8754	8,8855	8,8150	8,9125	8,7066	8,9316	8,5560	8,9490
10:1	9,9532	9,9645	9,8446	9,8857	9,7638	9,9360	9,6014	9,9892
11.2:1	11,070	11,248	11,058	11,141	10,859	11,268	10,843	11,220
12.5:1	12,169	12,182	12,517	12,902	12,169	12,899	12,165	12,570
14:1	13,736	13,945	13,928	14,431	13,492	14,238	13,628	14,104
16:1	15,849	15,691	15,867	16,296	15,136	16,020	15,608	15,775
18:1	17,573	17,578	17,550	18,284	17,086	17,586	17,870	17,659
20:1	19,525	20,145	19,718	19,820	19,130	19,760	19,750	20,130

i	3315	3355	3400	3425	3450	3475	3500	3530	3560	3600	3630	3670	3710	3750	3800	3850	3900
22.4:1	21,774	22,852	22,115	22,693	22,087	22,536	21,329	22,058	21,958	22,980	23,566	23,179	22,496	22,728	21,952	22,680	23,222
25:1	24,508	25,380	24,570	25,401	24,531	25,139	24,896	24,930	25,105	25,635	26,173	25,945	24,993	24,993	24,389	25,300	25,791
28:1	27,253	28,313	27,423	28,275	27,365	28,170	27,325	27,825	27,894	28,726	29,197	28,232	27,895	28,318	27,220	28,350	28,771
31.5:1	30,442	31,751	30,773	31,561	30,688	31,922	30,643	31,415	31,152	31,862	32,742	31,407	31,303	31,610	30,546	31,446	32,264
35.5:1	34,980	35,312	34,754	35,204	34,130	35,855	34,590	35,118	34,990	35,907	36,415	35,617	35,352	35,504	34,498	36,084	36,420
40:1	38,987	39,829	38,204	39,237	37,518	40,565	37,464	39,516	39,610	41,583	40,806	40,772	39,660	39,777	38,701	40,427	39,446
45:1	43,803	44,941	44,728	44,095	42,350	45,635	42,885	44,340	44,073	46,512	45,244	45,005	44,429	44,631	42,806	45,360	44,526
50:1	48,151	48,674	50,632	51,065	47,457	52,240	48,111	49,677	49,443	52,111	49,002	50,630	48,051	50,069	48,458	51,998	50,696
56:1	54,353	55,718	56,338	57,118	52,618	57,664	53,897	55,739	54,688	58,469	55,314	55,581	55,014	56,047	54,600	56,880	54,283
63:1	60,836	63,463	63,371	64,291	60,713	64,413	60,642	63,806	62,303	66,024	62,056	62,537	63,009	62,689	61,446	63,350	61,855
71:1	68,679	70,971	69,012	71,434	67,459	71,945	69,500	69,885	70,000	71,570	69,478	70,267	69,639	71,460	68,530	71,100	70,373
80:1	76,148	79,595	76,332	80,150	76,148	78,979	79,573	78,230	78,874	78,289	74,395	79,040	80,165	81,646	77,341	79,000	77,668
90:1	87,863	89,557	86,960	90,506	85,430	88,864	91,136	87,500	88,763	87,194	84,772	90,480	90,191	92,547	87,009	91,580	88,293
100:1	97,625	102,64	97,705	98,109	95,648	99,847	100,73	99,743	98,996	97,861	96,446	101,82	102,61	104,52	97,759	98,880	99,856

i	4315	4355	4400	4425	4450	4475	4500	4530	4560	4600	4630	4670	4710	4750	4800	4850	4900
112:1	110,77	111,56	110,87	114,24	103,50	117,46	109,63	113,54	109,38	119,10	112,51	111,16	108,21	110,19	107,45	113,76	110,41
125:1	124,58	124,95	126,76	127,43	116,50	128,65	121,75	127,08	121,52	133,31	124,95	124,00	126,31	124,54	122,85	126,90	122,63
140:1	136,97	137,33	140,84	142,80	129,55	145,26	135,82	137,01	135,63	148,40	139,39	138,95	138,64	139,00	136,50	142,20	136,79
160:1	151,26	153,40	157,29	158,16	144,70	161,46	152,31	157,91	152,20	165,64	156,32	157,46	155,47	156,93	152,44	157,73	153,40
180:1	170,83	177,94	176,68	178,49	166,27	181,53	169,40	177,36	171,88	184,76	173,85	176,86	175,50	175,43	171,23	177,75	170,61
200:1	194,53	195,23	199,72	199,91	185,32	200,67	191,06	201,16	188,95	205,93	191,11	200,09	190,07	197,40	193,83	205,85	191,18
224:1	215,86	226,65	216,42	223,23	213,17	226,48	218,44	222,38	220,01	226,16	218,37	223,59	222,15	223,67	214,91	222,19	221,18
250:1	245,80	248,68	244,65	250,02	237,59	250,37	246,38	252,22	241,85	252,07	240,05	252,96	240,60	251,68	243,28	257,31	247,85
280:1	278,36	281,01	272,60	289,17	266,93	291,02	278,00	282,90	283,15	283,27	270,97	284,58	275,42	282,41	270,69	287,81	274,81
315:1	305,62	316,18	307,10	327,10	298,78	327,35	316,64	320,00	318,50	318,84	312,65	317,89	309,89	323,29	308,39	325,00	308,30
355:1	343,40	355,26	348,92	353,17	337,29	366,92	354,10	346,07	346,85	354,27	347,39	355,06	355,16	354,09	346,49	352,30	345,18
400:1	380,74	397,98	385,93	396,26	380,74	402,79	405,42	387,39	390,82	387,53	371,97	399,39	408,84	404,56	391,04	391,45	380,96
450:1	439,31	447,79	439,67	447,46	427,15	453,21	464,34	433,30	439,82	431,61	423,86	457,20	459,97	458,57	439,92	453,78	433,08
500:1	488,13	513,19	493,99	485,05	478,24	509,22	513,19	493,93	490,53	484,41	482,23	514,50	523,32	517,92	494,27	489,95	489,79
560:1	544,65	549,45	553,31	544,43	533,62	564,35	550,83	553,24	530,79	542,58	543,28	576,24	589,47	573,77	558,29	544,43	530,00
630:1	607,72	607,26	598,73	605,66	595,41	627,09	589,75	623,28	594,53	609,01	606,19	638,62	632,69	642,67	604,11	609,81	597,10

Allowable external loads of speed reducers for agitator drives

SF/SG

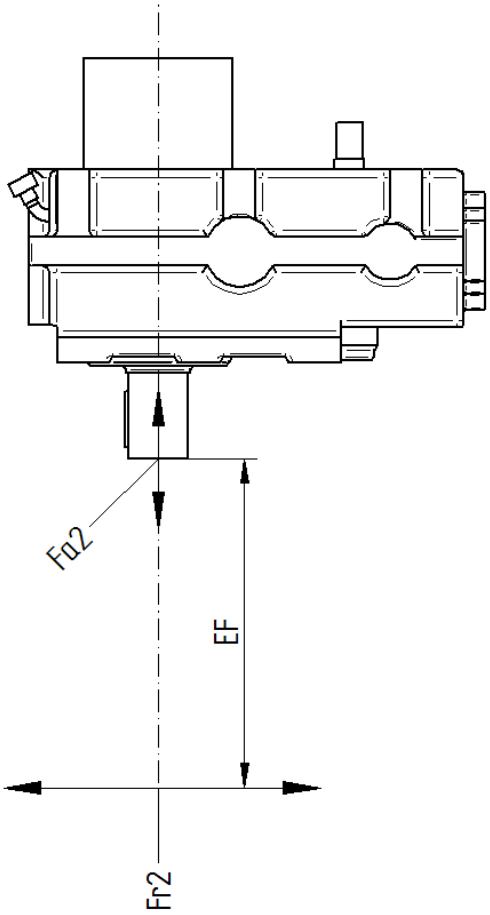

Symbols used

Symbol	Explanation
K_{SF}	Selection factor
F_{a2}	Allowable axial force on the output shaft. The force can act in both directions
F_{r2}	Allowable radial force
E_F	Force location from the shaft end
n_2	Output speed

The output shaft load capacity is a complex combination of several factors. The external load tables and diagrams are only for certain operation conditions. Please consult Kumera for exact lifetime calculations for your application.

Allowed axial force F_{a2}

Size	SF									SG					
	80	90	100	112	125	140	160	180	200	225	250	280	315	355	400
	Fa_2 kN	Fa_2 kN	Fa_2 kN	Fa_2 kN	Fa_2 kN	Fa_2 kN	Fa_2 kN	Fa_2 kN	Fa_2 kN	Fa_2 kN	Fa_2 kN	Fa_2 kN	Fa_2 kN	Fa_2 kN	Fa_2 kN
Operational 15<n2<100 rpm	2.2	3.0	3.8	3.7	4.8	7.1	8.3	8.9	10.2	51	56	63	83	51	63
Non-operational n2~T2~0	8.8	12	15	15	19	29	33	35	41	204	225	254	332	204	250

Axial forces will reduce the allowed radial force (next page) and/or power rating. For applications which have both significant axial and radial force, please consult Kumera.

Allowable external loads of speed reducers for agitator drives

SF

Allowed radial force F_{r2}

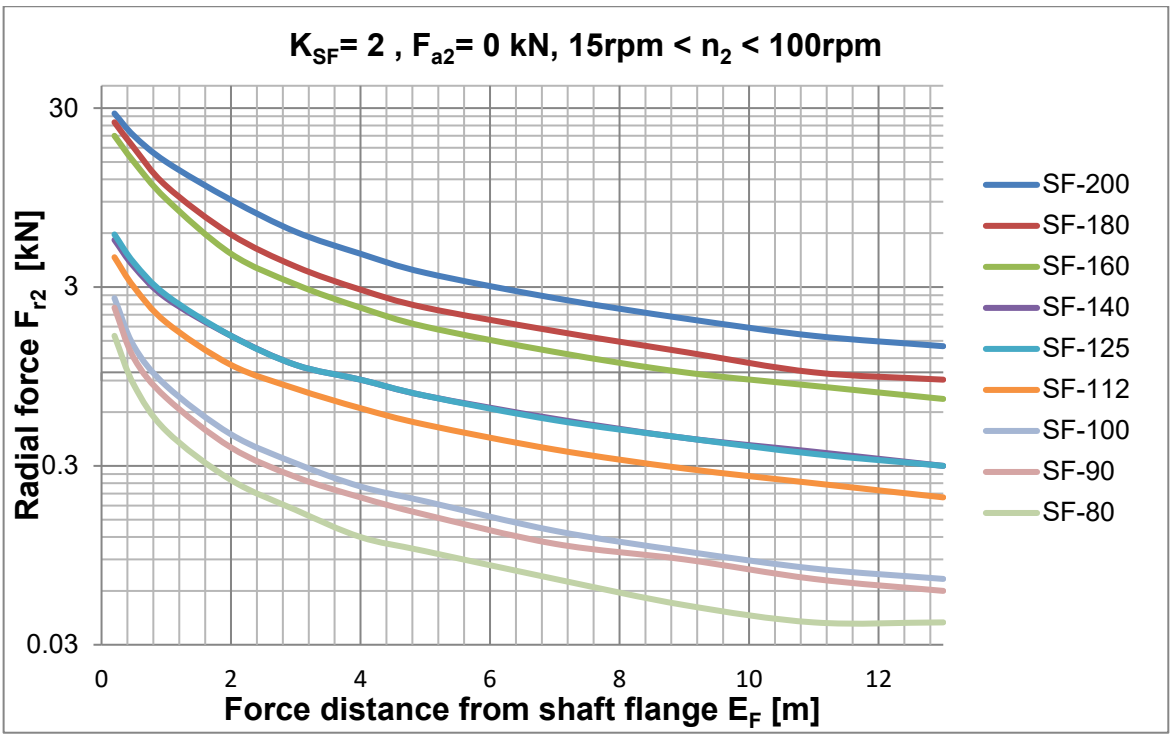

SG

Allowed radial force F_{r2}

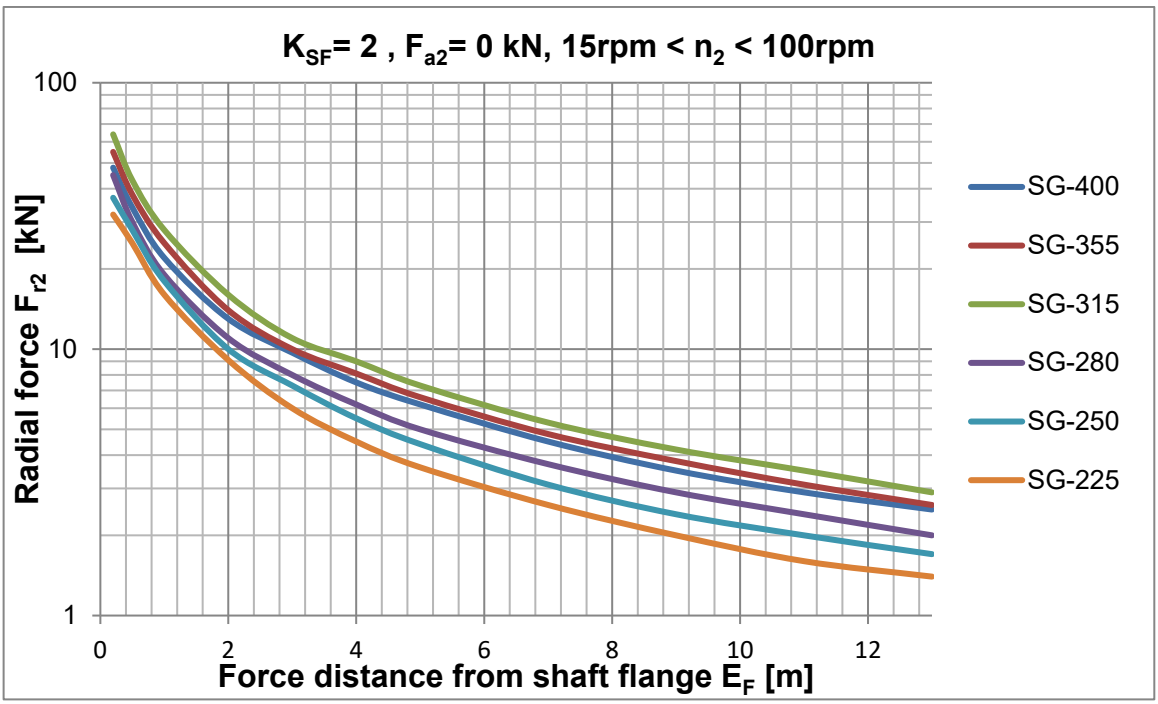

If the gearbox is subjected to low or moderate external forces, gearboxes without a reinforced low speed shaft can be used in agitator applications. See more information in the Kumera Helical and Bevel Gearboxes catalogue.

Allowable external loads of speed reducers for agitator drives

E-series

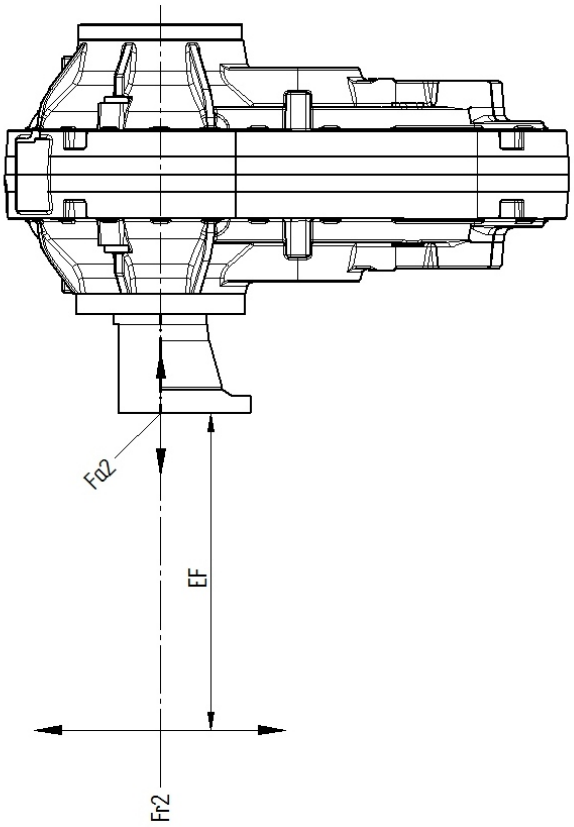

Symbols used

Symbol	Explanation
K_{SF}	Selection factor
F_{a2}	Allowable axial force on the output shaft. The force can act in both directions
F_{r2}	Allowable radial force
E_F	Force location from the shaft end
n_2	Output speed

The output shaft load capacity is a complex combination of several factors. The external load tables and diagrams are only for certain operation conditions. Please consult Kumera for exact lifetime calculations for your application.

Allowed axial force F_{a2}

Size	315	355	400	425	450	475	500	530	560	600	630	670	710	750	800	850	900
	F_{a2} kN	F_{a2} kN	F_{a2} kN	F_{a2} kN	F_{a2} kN	F_{a2} kN	F_{a2} kN	F_{a2} kN	F_{a2} kN	F_{a2} kN	F_{a2} kN	F_{a2} kN	F_{a2} kN	F_{a2} kN	F_{a2} kN	F_{a2} kN	F_{a2} kN
Operational $15<n_2<100$ rpm	123	150	158	196	212	212	228	228	228	277	277	277	353	353	353	412	461
Non-operational $n_2 \sim T_2 \sim 0$	246	300	316	392	424	424	456	456	456	554	554	554	706	706	706	824	922

Axial forces will reduce the allowed radial force (next page) and/or power rating. For applications which have both significant axial and radial force, please consult Kumera.

Allowable external loads of speed reducers for agitator drives

SE

Allowed radial force F_{r2}

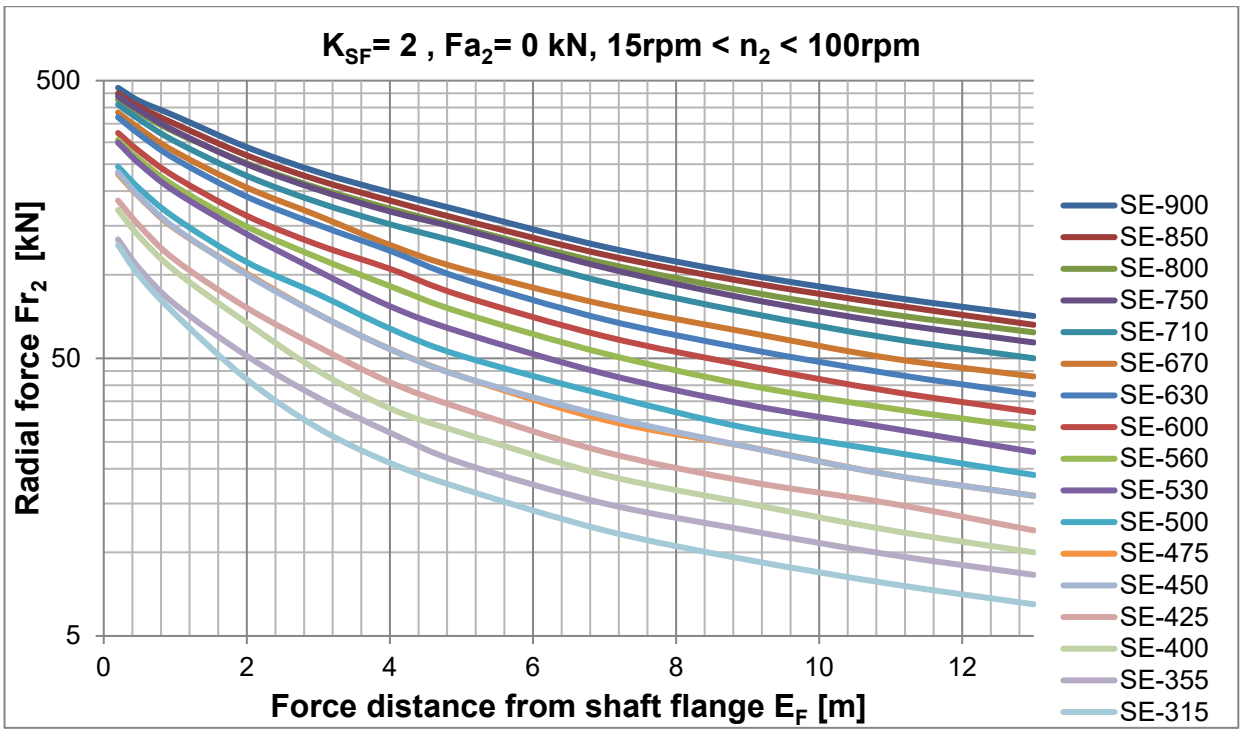

LE

Allowed radial force F_{r2}

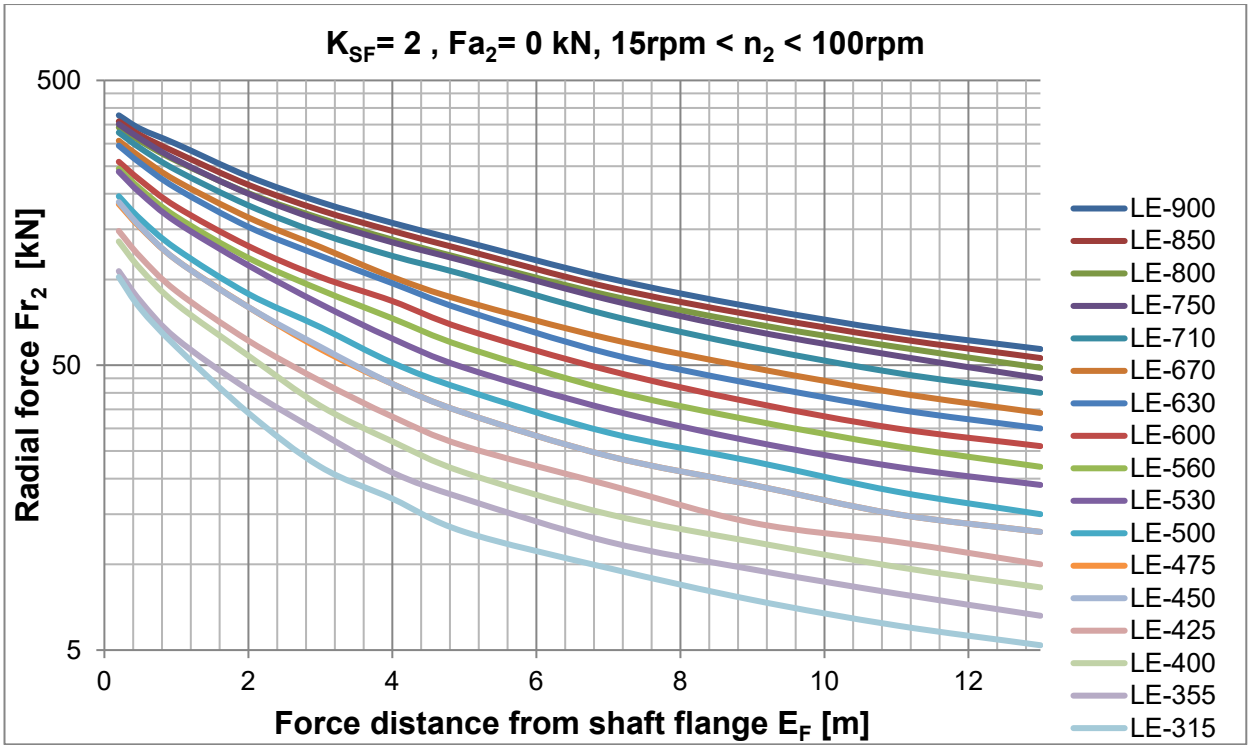

Helical Gearboxes

SF-2000 i = 5,6:1 – 20:1
SF-3000 i = 22,4:1 – 100:1

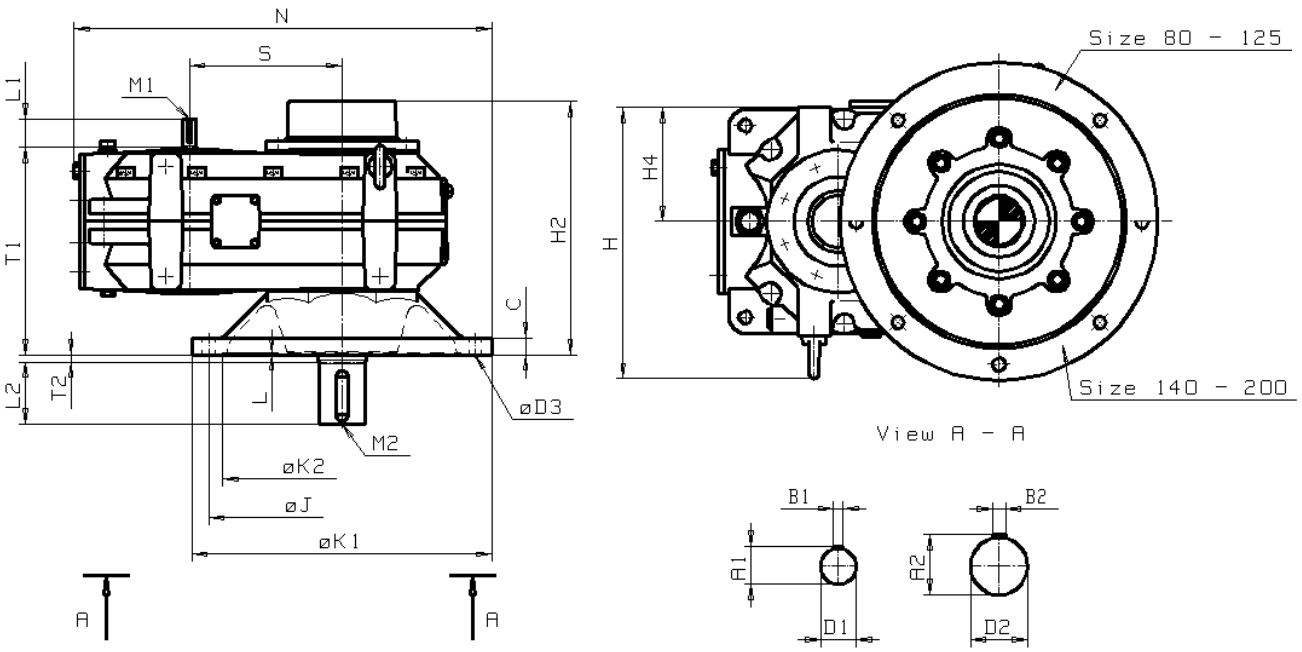

Size	C	D3	H	H2	H4	J	K1	K2	L	N	S	T1	T2	Output shaft D2	L2	A2	B2	M2
80	12	11	225	224	90	225	260	190H9	4	358	127	182	0	55m6	82	59	16	M20x42
90	14	11	245	250	100	250	285	215H9	4	395,5	142	202,5	0	65m6	105	69	18	M20x42
100	16	14	277	280	112	280	320	240H9	4	446	160	225	0	70m6	105	74,5	20	M20x42
112	18	14	303	310	125	315	355	275H9	4	496,5	180	255	0	80m6	130	85	22	M20x42
125	20	18	342	345	140	355	400	310H9	4	555	200	285	0	90m6	130	95	25	M24x50
140	22	18	382	385	160	400	445	355H9	4	622,5	225	315	0	100m6	165	106	28	M24x50
160	25	22	431	430	180	450	500	400H9	4	697	255	352,5	0	110m6	165	116	28	M24x50
180	28	22	471	480	200	500	550	450H9	4	772	285	390	0	120m6	165	127	32	M24x50
200	36	26	540	530	225	560	630	500H9	6	878	320	435	0	140m6	200	148	36	M30x60

Size	Input shaft F-2000										Input shaft F-3000									
	i = 5,6:1 - 16:1					i = 18:1 - 20:1					i = 22,4:1 - 71:1					i = 80:1 - 100:1				
	D1	L1	A1	B1	M1	D1	L1	A1	B1	M1	D1	L1	A1	B1	M1	D1	L1	A1	B1	M1
80	16k6	40	18	5	M5x12,5	16k6	40	18	5	M5x12,5	14k6	30	16	5	M5x12,5	11k6	23	12,5	4	M4x10
90	19k6	40	21,5	6	M6x16	19k6	40	21,5	5	M5x12,5	16k6	40	18	5	M5x12,5	14k6	30	16	5	M5x12,5
100	24k6	50	27	8	M8x19	19k6	40	21,5	6	M6x16	16k6	40	18	5	M5x12,5	14k6	30	16	5	M5x12,5
112	24k6	50	27	8	M8x19	24k6	50	27	8	M8x19	19k6	40	21,5	6	M6x16	16k6	40	18	5	M5x12,5
125	28k6	60	31	8	M10x22	24k6	50	27	8	M8x19	24k6	50	27	8	M8x19	19k6	40	21,5	6	M6x16
140	32k6	80	35	10	M12x28	28k6	60	31	8	M10x22	24k6	50	27	8	M8x19	19k6	40	21,5	6	M6x16
160	38k6	80	41	10	M12x28	32k6	80	35	10	M12x28	28k6	60	31	8	M10x22	24k6	50	27	8	M8x19
180	42k6	82	45	12	M16x36	38k6	80	41	10	M12x28	32k6	80	35	10	M12x28	28k6	60	31	8	M10x22
200	48k6	82	51,5	14	M16x36	42k6	82	45	12	M16x36	32k6	80	35	10	M12x28	28k6	60	31	8	M10x22

If the gearbox is subjected to low or moderate external forces, gearboxes without a reinforced low speed shaft can be used in agitator applications. See more information in the Kumera Helical and Bevel Gearboxes catalogue.

Helical Gearboxes

SF-4000

i = 112:1 – 400:1

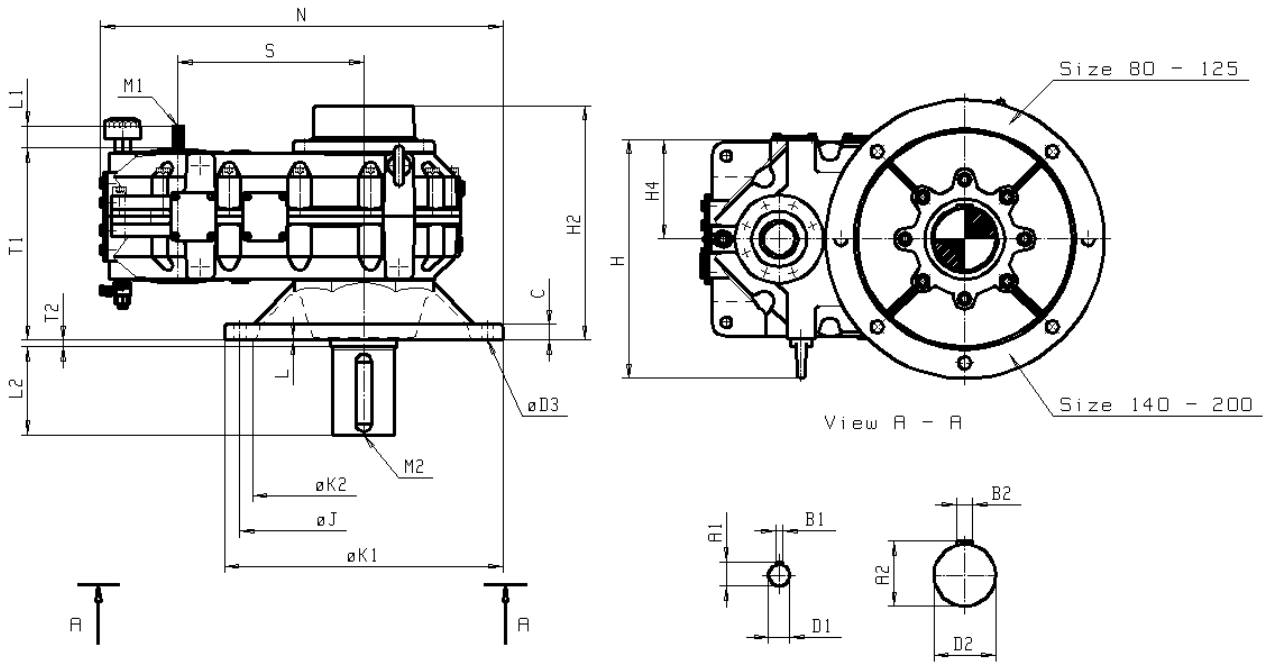

Size	C	D3	H	H2	H4	J	K1	K2	L	N	S	T1	T2	Output shaft D2	L2	A2	B2	M2
125	20	18	342	345	140	355	400	310H9	4	576	265	285	0	90m6	130	95	25	M24x50
140	22	18	382	385	160	400	445	355H9	4	643,5	295	315	0	100m6	165	106	28	M24x50
160	25	22	431	430	180	450	500	400H9	4	724	335	352,5	0	110m6	165	116	28	M24x50
180	28	22	471	480	200	500	550	450H9	4	805	375	390	0	120m6	165	127	32	M24x50
200	36	26	540	530	225	560	630	500H9	6	910	420	435	0	140m6	200	148	36	M30x60

Size	Input shaft F-4000									
	i = 112:1 - 280:1					i = 315:1 - 400:1				
	D1	L1	A1	B1	M1	D1	L1	A1	B1	M1
125	16k6	40	18	5	M5x12,5	14k6	30	16	5	M5x12,5
140	16k6	40	18	5	M5x12,5	14k6	30	16	5	M5x12,5
160	19k6	40	22	6	M6x16	16k6	40	18	5	M5x12,5
180	24k6	50	27	8	M8x19	19k6	40	21,5	6	M6x16
200	24k6	50	27	8	M8x19	19k6	40	21,5	6	M6x16

If the gearbox is subjected to low or moderate external forces, gearboxes without a reinforced low speed shaft can be used in agitator applications. See more information in the Kumera Helical and Bevel Gearboxes catalogue.

Helical Gearboxes

SGL-2000 i = 5,6:1 – 20:1
SGL-3000 i = 22,4:1 – 100:1

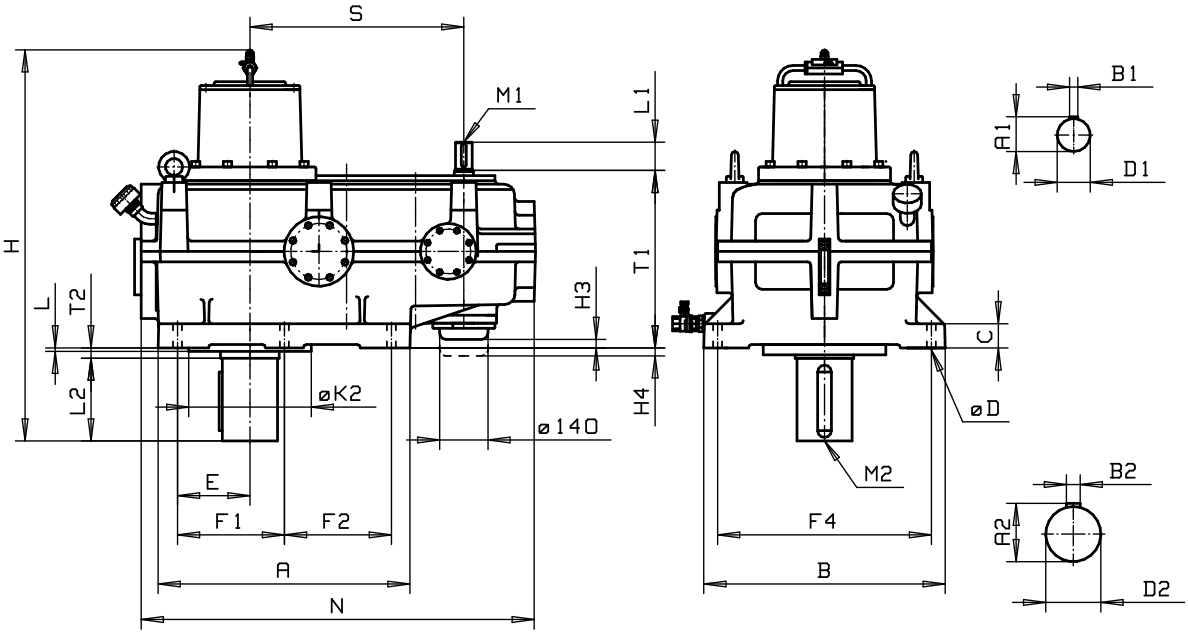

Size	A	B	C	D	E	F1	F2	F4	H	H3	H4	K2	L	N	S 2000	S 3000	T1	T2	Output shaft D2	L2	A2	B2	M2
225	592	570	60	22	155	250	250	500	972		38	280h8	10	922	385	497	420	30	130m6	200	137	32	M24x50
250	646	640	60	26	180	280	280	560	1051		25	315h8	10	1025	430	555	465	30	140m6	200	148	36	M30X60
280	711	700	70	26	210	310	310	620	1164		1	350h8	10	1144	480	620	515	30	160m6	240	169	40	M30X60
315	801	800	70	33	240	355	355	710	1260	6		400h8	10	1295	540	700	575	30	170m6	240	179	40	M30X60
355	929	920	80	33	260	415	415	830	1360	18		420h8	10	1430	605	785	640	30	180m6	240	190	45	M30X60
400	1032	1020	80	33	310	465	465	930	1492	38		440h8	20	1605	680	880	710	40	200m6	280	210	45	M36X71

Size	Input shaft SGL-2000										Input shaft SGL-3000									
	i = 5,6:1 - 14:1					i = 16:1 - 20:1					i = 22,4:1 - 63:1					i = 71:1 - 100:1				
	D1	L1	A1	B1	M1	D1	L1	A1	B1	M1	D1	L1	A1	B1	M1	D1	L1	A1	B1	M1
225	55m6	82	58	16	M20x42	42k6	82	45	12	M16x36	38k6	80	41	10	M12x28	28k6	60	31	8	M10x22
250	60m6	105	64	18	M20x42	48k6	82	51,5	14	M16x36	42k6	82	45	12	M16x36	32k6	80	35	10	M12x28
280	65m6	105	69	18	M20x42	55m6	82	59	16	M20x42	48k6	82	51,5	14	M16x36	38k6	80	41	10	M12x28
315	75m6	105	79,5	20	M20x42	65m6	105	69	18	M20x42	55m6	82	58	16	M20x42	42k6	82	45	12	M16x36
355	85m6	130	90	22	M20x42	75m6	105	79,5	20	M20x42	60m6	105	64	18	M20x42	48k6	82	52	14	M16x36
400	95m6	130	100	25	M24x50	85m6	130	90	22	M20x42	65m6	105	69	18	M20x42	48k6	82	52	14	M16x36

If the gearbox is subjected to low or moderate external forces, gearboxes without a reinforced low speed shaft can be used in agitator applications. See more information in the Kumera Helical and Bevel Gearboxes catalogue.

Helical Gearboxes

SGT-2000 i = 5,6:1 – 20:1
SGT-3000 i = 22,4:1 – 100:1

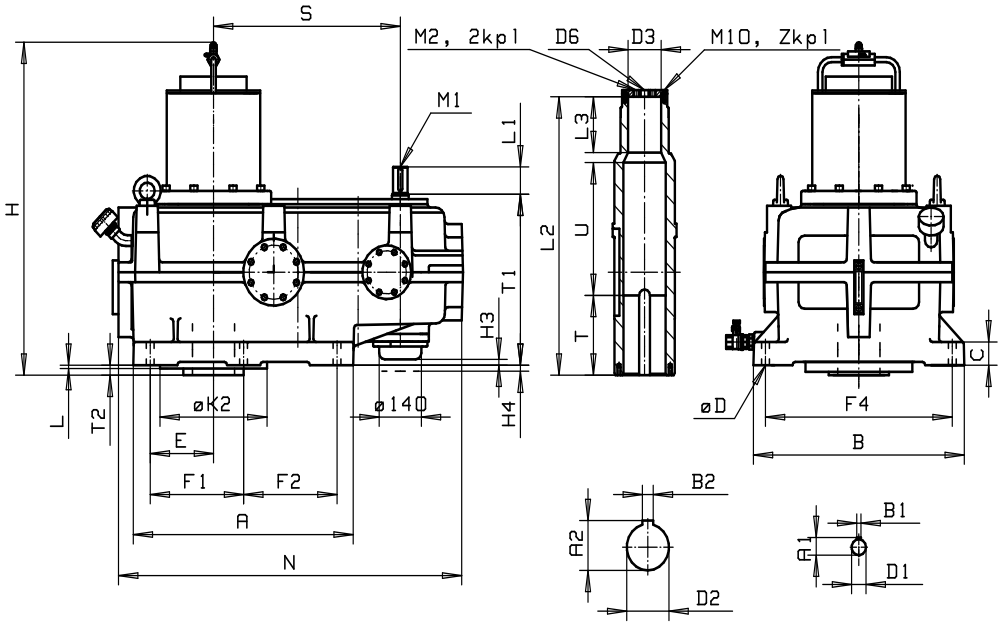

Size	A	B	C	D	E	F1	F2	F4	H	H3	H4	K2	L	N	S 2000	S 3000	T1	T2
225	592	570	60	22	155	250	250	500	870		38	280h8	10	922	385	497	420	30
250	646	640	60	26	180	280	280	560	945		25	315h8	10	1025	430	555	465	30
280	711	700	70	26	210	310	310	620	1020		1	350h8	10	1144	480	620	515	30
315	801	800	70	33	240	355	355	710	1110	6		400h8	10	1295	540	700	575	30
355	929	920	80	33	260	415	415	830	1200	18		420h8	10	1430	605	785	640	30
400	1032	1020	80	33	310	465	465	930	1305	38		440h8	20	1605	680	880	710	40

Size	Input shaft SGT-2000										Input shaft SGT-3000									
	i = 5,6:1 - 14:1					i = 16:1 - 20:1					i = 22,4:1 - 63:1					i = 71:1 - 100:1				
	D1	L1	A1	B1	M1	D1	L1	A1	B1	M1	D1	L1	A1	B1	M1	D1	L1	A1	B1	M1
225	55m6	82	58	16	M20x42	42k6	82	45	12	M16x36	38k6	80	41	10	M12x28	28k6	60	31	8	M10x22
250	60m6	105	64	18	M20x42	48k6	82	51,5	14	M16x36	42k6	82	45	12	M16x36	32k6	80	35	10	M12x28
280	65m6	105	69	18	M20x42	55m6	82	58	16	M20x42	48k6	82	51,5	14	M16x36	38k6	80	41	10	M12x28
315	75m6	105	79,5	20	M20x42	65m6	105	69	18	M20x42	55m6	82	58	16	M20x42	42k6	82	45	12	M16x36
355	85m6	130	90	22	M20x42	75m6	105	79,5	20	M20x42	60m6	105	64	18	M20x42	48k6	82	51,5	14	M16x36
400	95m6	130	100	25	M24x50	85m6	130	90	22	M20x42	65m6	105	69	18	M20x42	48k6	82	51,5	14	M16x36

Size	Output shaft										
	D2	D3	D6	L2	L3	T	U	A2	B2	M2	Z
225	110H7	90H7	26	690	150	190	330	116,4	28	M20	6
250	125H7	100H7	26	760	160	190	390	132,4	32	M20	6
280	140H7	110H7	26	840	170	240	400	148,4	36	M20	6
315	160H7	120H7	26	930	180	240	480	169,4	40	M24	8
355	180H7	120H7	26	1020	220	270	480	190,4	45	M24	8
400	200H7	130H7	26	1140	250	270	560	210,4	45	M24	8

If the gearbox is subjected to low or moderate external forces, gearboxes without a reinforced low speed shaft can be used in agitator applications. See more information in the Kumera Helical and Bevel Gearboxes catalogue.

Helical Gearboxes

E-series 315-530

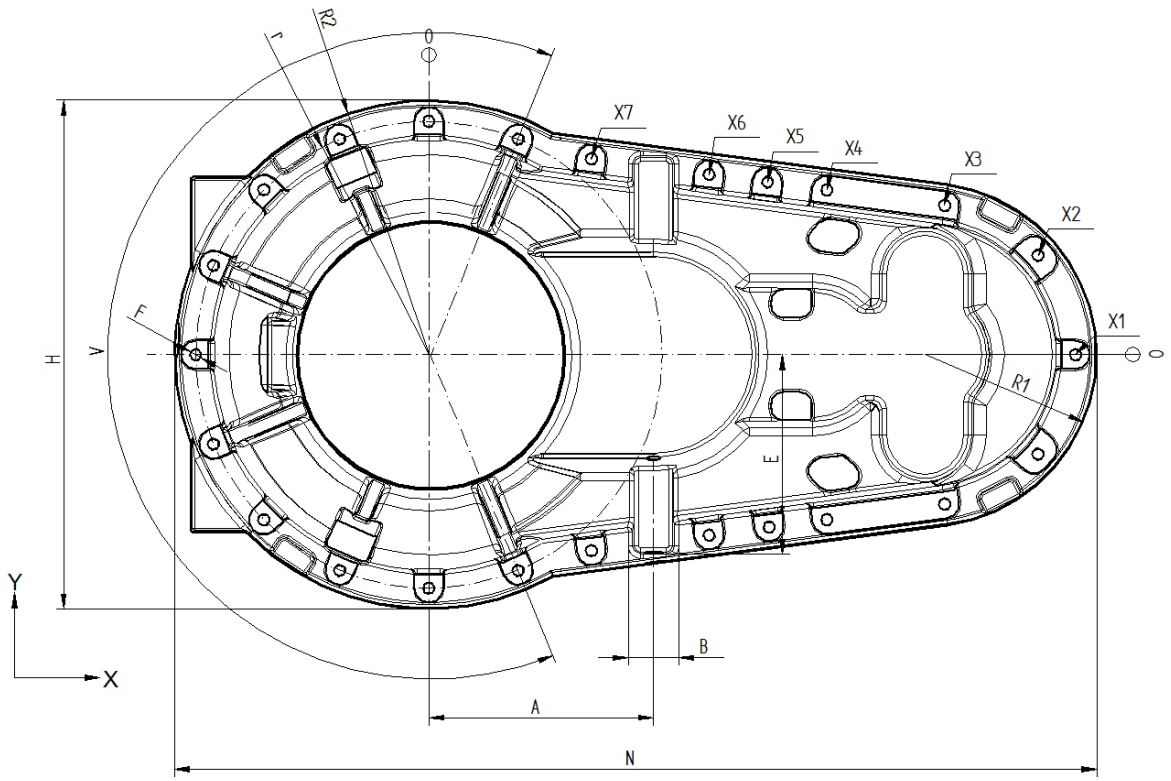

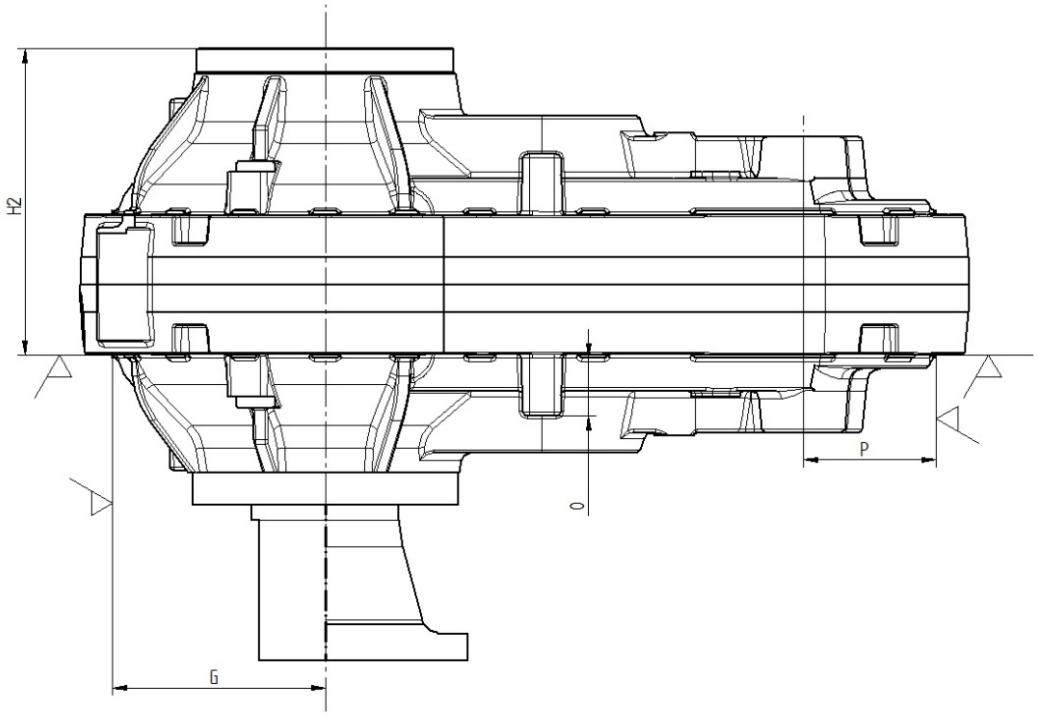

Helical Gearboxes

E-series 315-530

Size	A	B	E	F	G	H	H2	N	O	P	R1	R2
315	315	71	281	M20	303	710	447	1290	93	183	235	355
355	355	82	306	M20	350	800	486.5	1440	102	205	255	400
400	400	87	342	M20	395	900	540	1615	108	230	285	450
425	425	88	389	M24	405	950	570.5	1742	116	258	330	475
450	450	108	402	M24	430	1000	611	1830	133	270	340	500
475	475	89	421	M24	460	1060	631.5	1931	130	284	355	530
500	500	100	455	M30	479	1120	687	2050	155	302	385	560
530	530	120	480	M30	520	1200	729.5	2175	148	325	405	600

Size	Input shaft side								Output shaft side	
	coord.	X1	X2	X3	X4	X5	X6	X7		deg_pcs
315	x	905.0	854.1	726.8	578	-	429.3	221.1	V	225°/11
	y	0	135.2	203.2	222.8	-	242.5	269.5	r	325
355	x	1010.0	972.6	814.4	635.9	-	457.4	249.2	V	225°/11
	y	0	124.2	223.1	246.6	-	270.1	297.5	r	370
400	x	1130.0	1088.5	912.6	714.3	-	516.1	273.1	V	225°/11
	y	0	136	247.9	274	-	300.1	332.1	r	415
425	x	1227.0	1177.4	974.9	756.7	-	538.6	320.5	V	225°/11
	y	0	162.2	287.5	316.2	-	345.0	373.7	r	437
450	x	1290.0	1215.6	1029.2	801.1	-	573.1	345.1	V	225°/11
	y	0	197.8	297.43	327.5	-	357.5	387.5	r	460
475	x	1360.0	1306.3	1087	868.9	-	650.8	373.1	V	225°/11
	y	0	175.6	311.3	340.0	-	368.8	405.3	r	490
500	x	1445.0	1386.9	1149.1	970.7	792.2	613.7	351.0	V	225°/11
	y	0	190.1	335.1	358.6	382.1	405.6	440.2	r	515
530	x	1525.0	1436.9	1216.3	938.7	-	661.1	383.5	V	225°/11
	y	0	234.0	351.9	388.5	-	425.0	461.6	r	550

Helical Gearboxes, Input shaft dimension table

E-2315 - 2530 **i = 5,6:1 – 20:1**
E-3315 - 3530 **i = 22,4:1 – 100:1**
E-4315 - 4530 **i = 112:1 – 630:1**

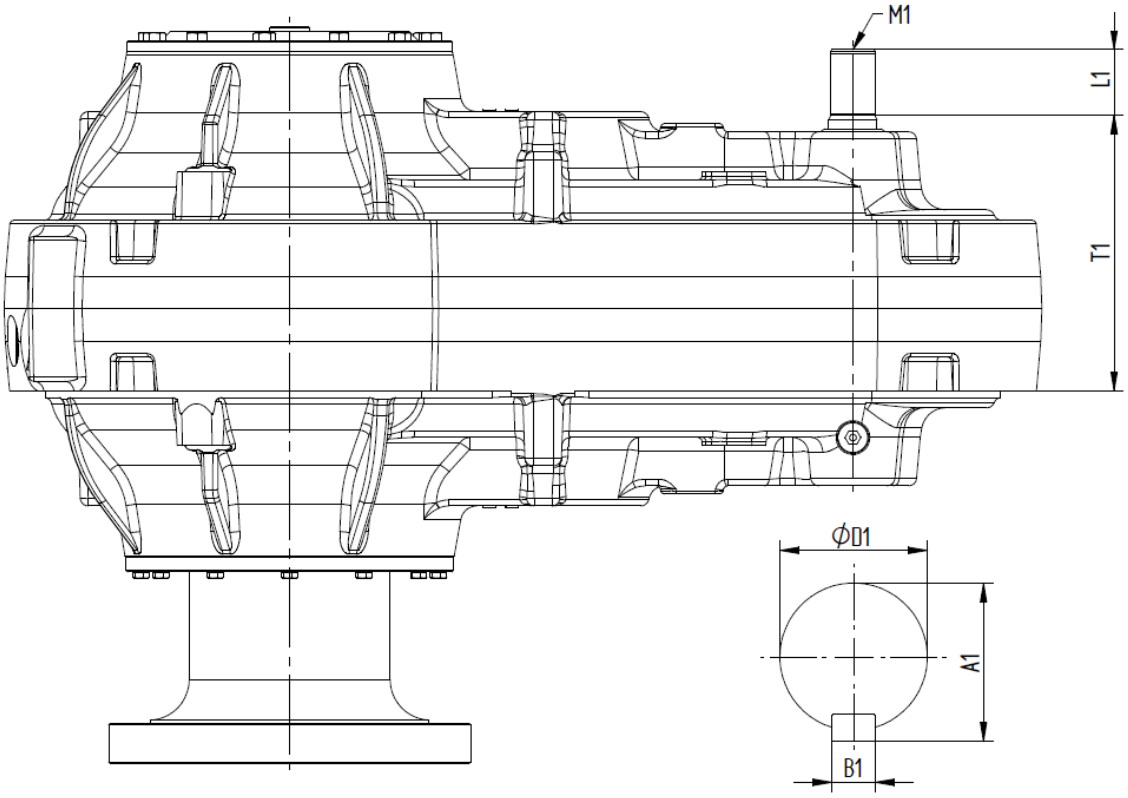

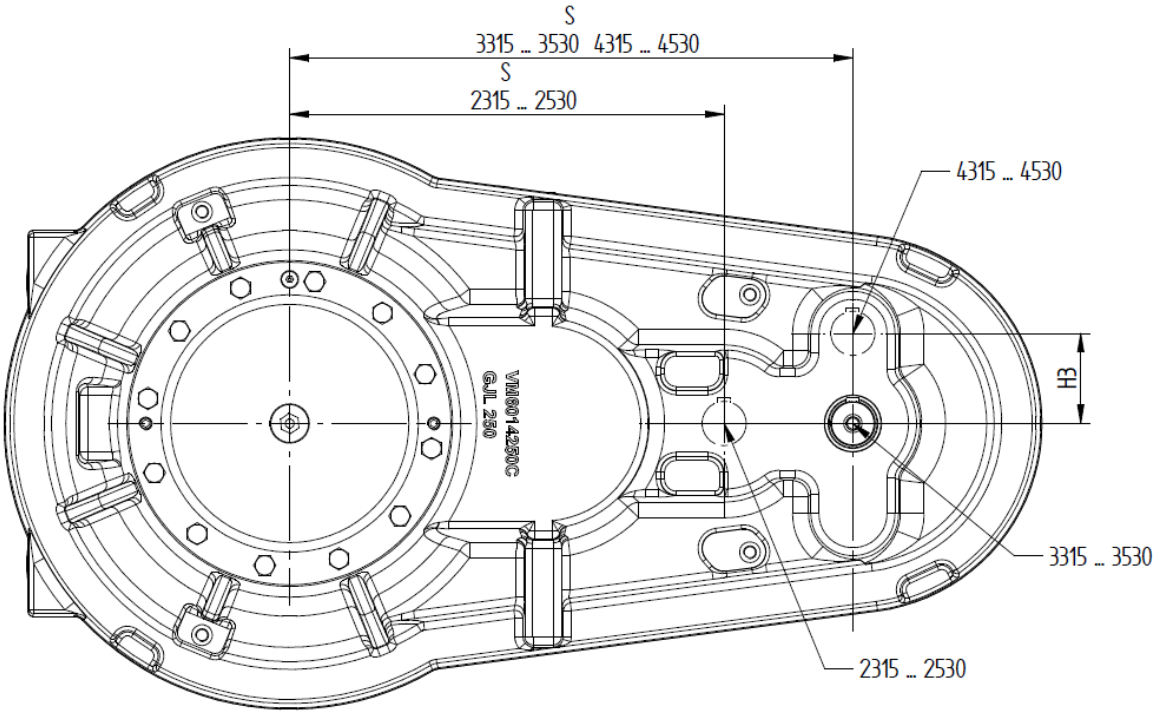

Helical Gearboxes, Input shaft dimension table

E-2315 - 2530 i = 5,6:1 – 20:1
E-3315 - 3530 i = 22,4:1 – 100:1
E-4315 - 4530 i = 112:1 – 630:1

	2315…2530												
	i = 5,6:1-14:1					i = 16:1-20:1					H3	S	T1
Size	D1	L1	A1	B1	M1	D1	L1	A1	B1	M1			
315	75	105	79.5	20	M20	65	105	69	18	M20	-	540	367
355	85	130	90	22	M20	75	105	79.5	20	M20	-	605	411
400	90	130	95	25	M24	85	130	90	22	M20	-	680	467
425	100	165	106	28	M24	90	130	95	25	M24	-	725	493
450	110	165	116	28	M24	90	130	95	28	M24	-	765	521
475	110	165	116	28	M24	100	165	106	28	M24	-	810	548
500	120	165	127	32	M24	100	165	106	28	M24	-	855	580
530	130	200	137	32	M24	110	165	116	28	M24	-	905	609

	3315…3530												
	i = 22,4:1-56:1					i = 63:1-100:1					H3	S	T1
Size	D1	L1	A1	B1	M1	D1	L1	A1	B1	M1			
315	55	82	59	16	M20	40	82	43	12	M16	-	700	342
355	60	105	64	18	M20	45	82	48.5	14	M16	-	785	379
400	65	105	69	18	M20	50	82	53.5	14	M16	-	880	424
425	70	105	74.5	20	M20	55	82	59	16	M20	-	937	447
450	75	105	79.5	20	M20	55	82	59	16	M20	-	990	475
475	80	130	85	22	M20	60	105	64	18	M20	-	1046	503
500	85	130	90	22	M20	65	105	69	18	M20	-	1105	528
530	90	130	95	25	M24	70	105	74.5	20	M20	-	1170	558

	4315…4530												
	i = 112:1-280:1					i = 315:1-630:1					H3	S	T1
Size	D1	L1	A1	B1	M1	D1	L1	A1	B1	M1			
315	32	58	35	10	M12	28	42	31	8	M10	112	700	342
355	38	58	41	10	M12	32	58	35	10	M12	125	785	379
400	42	82	45	12	M16	38	58	41	10	M12	140	880	424
425	48	82	51.5	14	M16	38	58	41	10	M12	150	937	447
450	48	82	51.5	14	M16	42	82	45	12	M16	160	990	475
475	50	82	53.5	14	M16	42	82	45	12	M16	170	1046	503
500	55	82	59	16	M20	48	82	51.5	14	M16	180	1105	528
530	60	105	64	18	M20	48	82	51.5	14	M16	190	1170	558

Helical Gearboxes, Output shaft dimension table

SE-2315 - 2530 **i = 5,6:1 – 20:1**
SE-3315 - 3530 **i = 22,4:1 – 100:1**
SE-4315 - 4530 **i = 112:1 – 630:1**

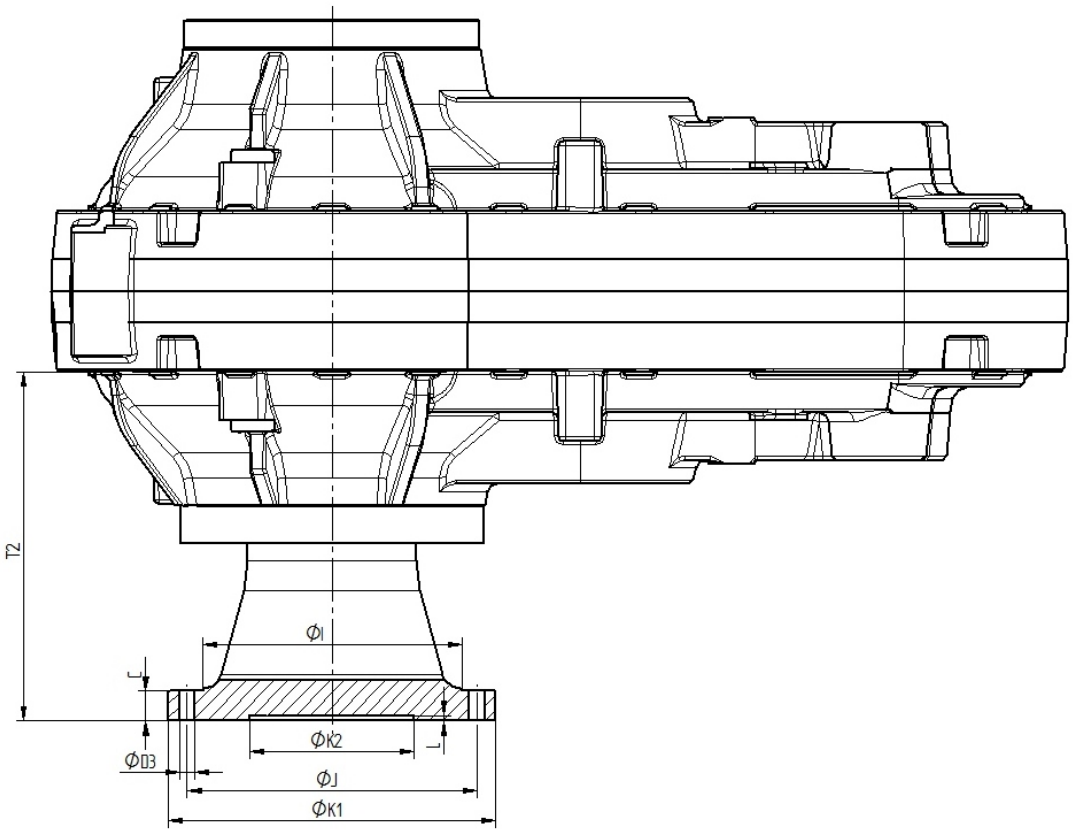

Size	C	D3	I	J	K1	K2	L	T2
315	50	16x ø26	345	400	450	230	12	463
355	50	16x ø26	385	440	490	250	12	494
400	50	20x ø26	415	470	530	270	12	530
425	65	16x ø33	440	510	570	290	12	565
450	65	16x ø33	470	540	610	310	12	604
475	65	18x ø33	470	540	610	310	12	629
500	65	20x ø33	510	580	650	330	12	678
530	65	24x ø33	550	620	690	350	12	746

Helical Gearboxes, Output shaft dimension table

LE-2315 - 2530 i = 5,6:1 – 20:1
LE-3315 - 3530 i = 22,4:1 – 100:1
LE-4315 - 4530 i = 112:1 – 630:1

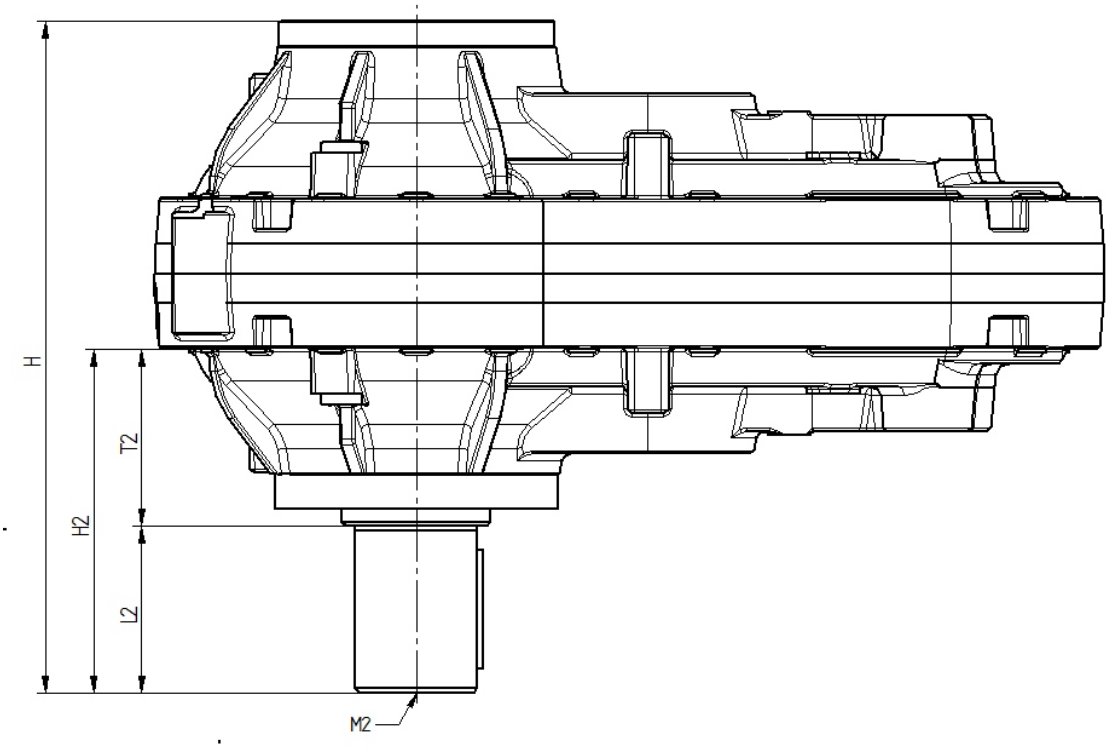

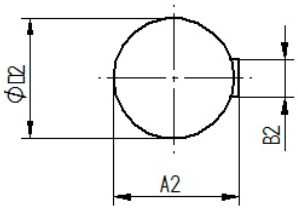

Size	H	H2	T2	D2	L2	A2	B2	M2
315	950	503	263	170	240	179	40	M30
355	1006	519	279	180	240	190	45	M30
400	1120	580	300	200	280	210	45	M36
425	1176	605	325	220	280	231	50	M36
450	1290	679	349	240	330	252	56	M42
475	1316	684	354	240	330	252	56	M42
500	1400	713	383	260	330	272	56	M42
530	1516	786	406	280	380	292	63	M48

Helical Gearboxes

E-3000

E-series 560-900

Output shaft down

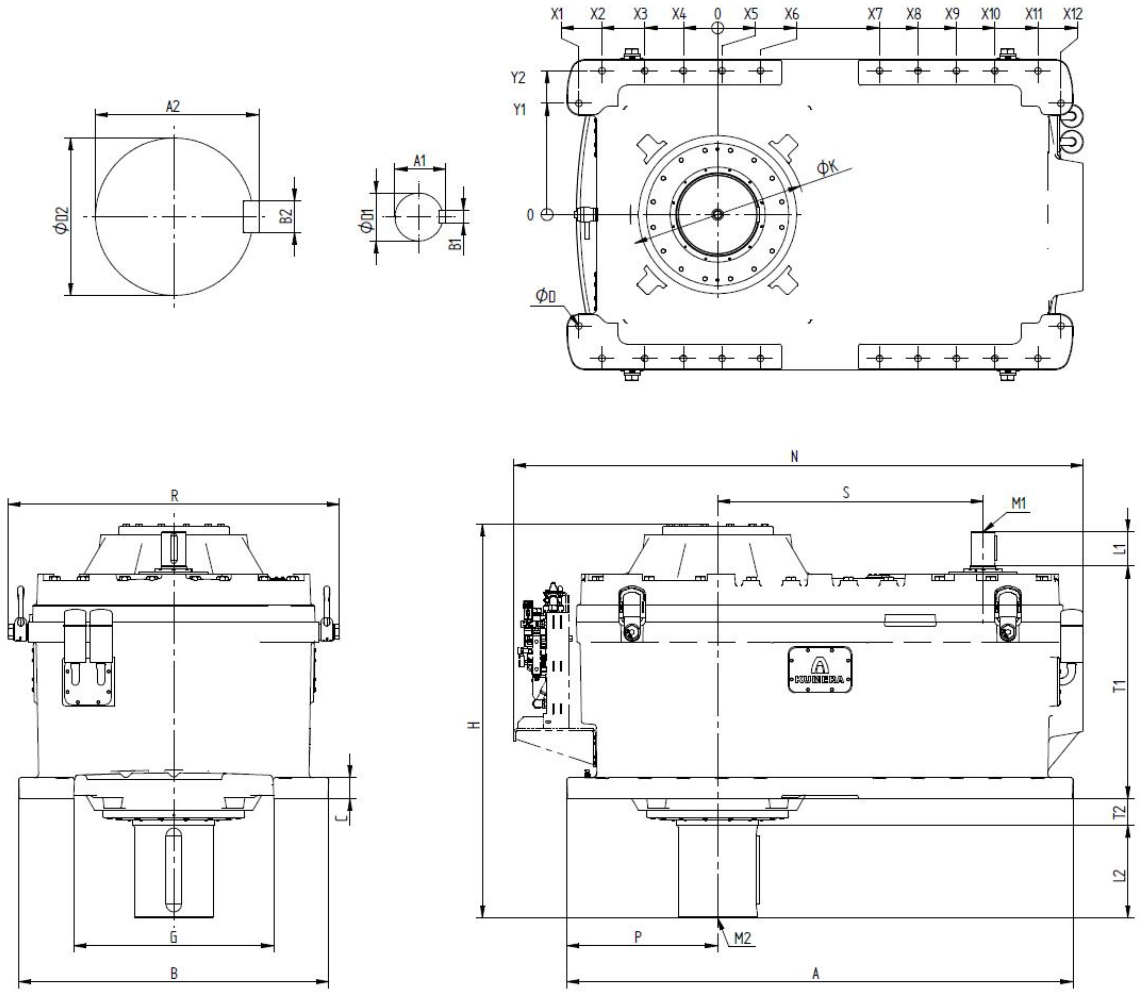

Size	X1	X2	X3	X4	X5	X6	X7	X8	X9	X10	X11	X12	Y1	Y2
560	580	525	340	155	30	215	585	770	955	1140	1325	1380	520	635
600	624	540	340	160	20	200	720	900	1080	1260	1460	1544	496	648
630	665	550	360	170	20	210	690	880	1070	1260	1450	1565	545	705
670	715	580	380	180	20	220	740	940	1140	1340	1540	1675	600	735
710	755	620	410	200	10	220	795	1005	1215	1425	1635	1770	615	775
750	780	675	425	200	25	250	900	1125	1350	1575	1825	1930	620	810
800	810	675	425	200	25	250	945	1170	1395	1620	1870	2005	650	840
850	905	760	505	250	5	260	1010	1265	1520	1775	2030	2175	695	900
900	925	770	505	240	25	290	1070	1335	1600	1865	2130	2285	750	975

Helical Gearboxes E-3000

E-series 560-900 Output shaft down

Size	A	B	C	ø D	G	H	ø K	N*	P	R	S	T1	T2
560	2060	1360	90	33	950	1720	800	2570	630	1460	1085	995	160
600	2280	1400	100	33	880	1840	880	2760	680	1520	1160	1062	190
630	2320	1500	100	33	960	1920	880	2870	710	1630	1220	1170	168
670	2480	1560	100	39	1070	2050	920	2980	760	1710	1300	1196	185
710	2616	1640	120	39	1100	2200	950	3130	799	1790	1375	1258	218
750	2850	1750	120	39	1100	2400	1100	3300	850	1870	1450	1320	280
800	2954	1809	120	39	1160	2300	1020	3500	880	1940	1550	1360	158
850	3190	1920	130	39	1250	2650	1200	3700	960	2040	1700	1500	230
900	3340	2070	130	45	1320	2730	1300	3830	990	2140	1800	1530	290

	Input shaft										Output shaft				
	i = 22,4:1-56:1					i = 63:1-100:1					D2	A2	B2	L2	M2
Size	D1	L1	A1	B1	M1	D1	L1	A1	B1	M1					
560	90	130	95	25	M24	75	105	79,5	20	M20	340	355	80	450	M48
600	100	165	106	28	M24	80	130	85	22	M20	360	375	80	450	M48
630	110	165	116	28	M24	90	130	95	25	M24	380	395	80	450	M48
670	110	165	116	28	M24	100	165	106	28	M24	400	417	90	500	M48
710	120	165	127	32	M24	100	165	106	28	M24	420	437	90	500	M48
750	130	200	137	32	M24	110	165	116	28	M24	440	457	90	540	M48
800	140	200	148	36	M30	120	165	127	32	M24	460	479	100	540	M48
850	150	200	158	36	M30	130	200	137	32	M24	480	499	100	540	M48
900	160	240	169	40	M30	140	200	148	36	M30	500	519	100	540	M48

* Dimension with water-cooled lubrication unit

Helical Gearboxes

E-3000

E-series 560-900

Output shaft up

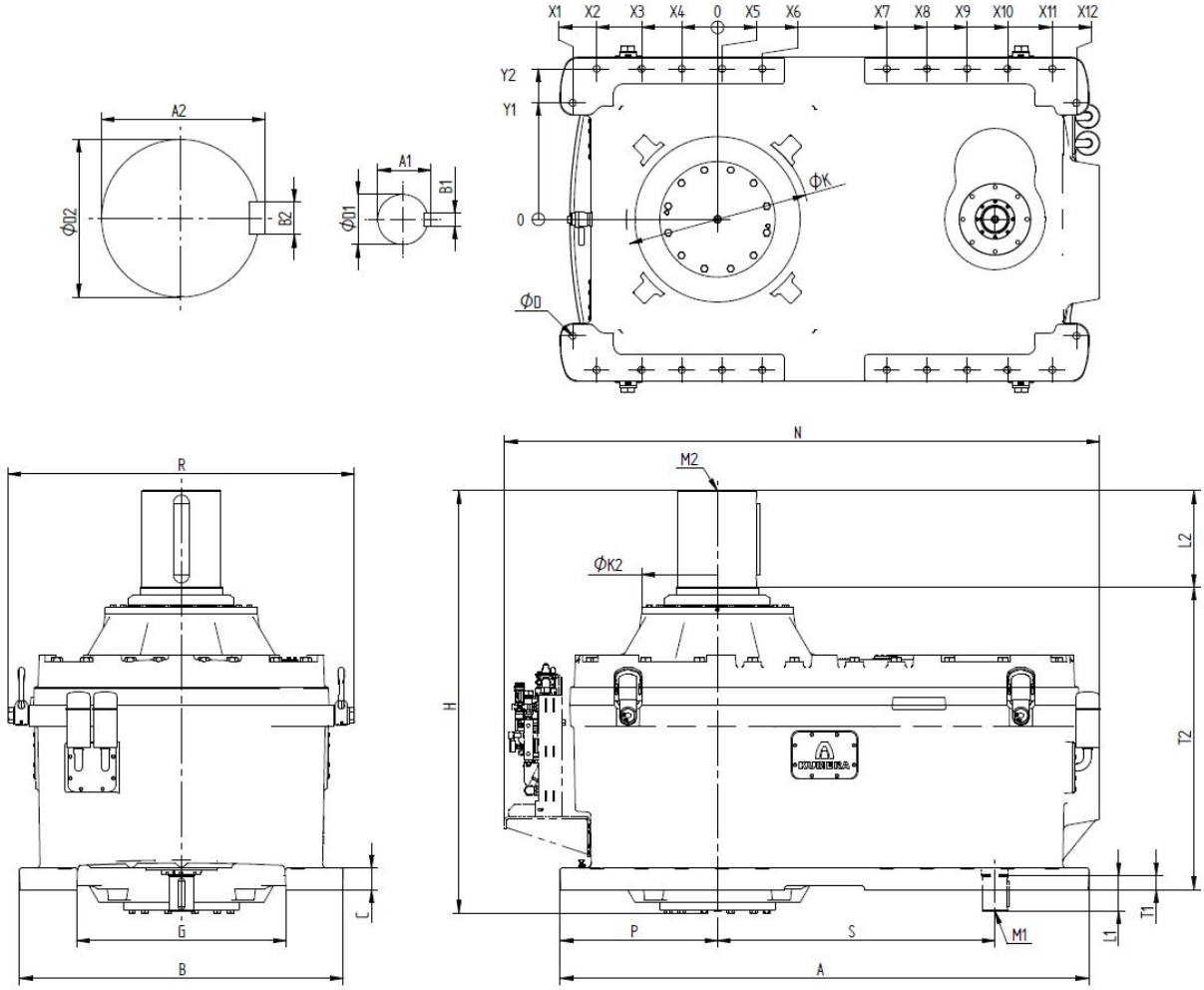

Size	X1	X2	X3	X4	X5	X6	X7	X8	X9	X10	X11	X12	Y1	Y2
560	580	525	340	155	30	215	585	770	955	1140	1325	1380	520	635
600	624	540	340	160	20	200	720	900	1080	1260	1460	1544	496	648
630	665	550	360	170	20	210	690	880	1070	1260	1450	1565	545	705
670	715	580	380	180	20	220	740	940	1140	1340	1540	1675	600	735
710	755	620	410	200	10	220	795	1005	1215	1425	1635	1770	615	775
750	780	675	425	200	25	250	900	1125	1350	1575	1825	1930	620	810
800	810	675	425	200	25	250	945	1170	1395	1620	1870	2005	650	840
850	905	760	505	250	5	260	1010	1265	1520	1775	2030	2175	695	900
900	925	770	505	240	25	290	1070	1335	1600	1865	2130	2285	750	975

Helical Gearboxes E-3000

E-series 560-900 Output shaft up

Size	A	B	C	ø D	G	H	ø K	ø K2	N*	P	R	S	T1	T2
560	2060	1360	90	33	950	1800	800	670	2570	630	1460	1085	20	1190
600	2280	1400	100	33	880	1860	880	710	2760	680	1520	1160	25	1260
630	2320	1500	100	33	960	2000	880	730	2870	710	1630	1220	10	1380
670	2480	1560	100	39	1070	2080	920	770	2980	760	1710	1300	30	1430
710	2616	1640	120	39	1100	2240	950	800	3130	799	1790	1375	30	1530
750	2850	1750	120	39	1100	2420	1100	830	3300	850	1870	1450	40	1620
800	2954	1809	120	39	1160	2360	1020	850	3500	880	1940	1550	69	1650
850	3190	1920	130	39	1250	2690	1200	1000	3700	960	2040	1700	60	1880
900	3340	2070	130	45	1320	2750	1300	1100	3830	990	2140	1800	70	1920

	Input shaft										Output shaft				
	i = 22,4:1-56:1					i = 63:1-100:1									
Size	**D1**	**L1**	**A1**	**B1**	**M1**	**D1**	**L1**	**A1**	**B1**	**M1**	**D2**	**A2**	**B2**	**L2**	**M2**
560	90	130	95	25	M24	75	105	79,5	20	M20	340	355	80	450	M48
600	100	165	106	28	M24	80	130	85	22	M20	360	375	80	450	M48
630	110	165	116	28	M24	90	130	95	25	M24	380	395	80	450	M48
670	110	165	116	28	M24	100	165	106	28	M24	400	417	90	500	M48
710	120	165	127	32	M24	100	165	106	28	M24	420	437	90	500	M48
750	130	200	137	32	M24	110	165	116	28	M24	440	457	90	540	M48
800	140	200	148	36	M30	120	165	127	32	M24	460	479	100	540	M48
850	150	200	158	36	M30	130	200	137	32	M24	480	499	100	540	M48
900	160	240	169	40	M30	140	200	148	36	M30	500	519	100	540	M48

* Dimension with water-cooled lubrication unit

Helical Gearboxes

E-4000

E-series 560-900

Output shaft down

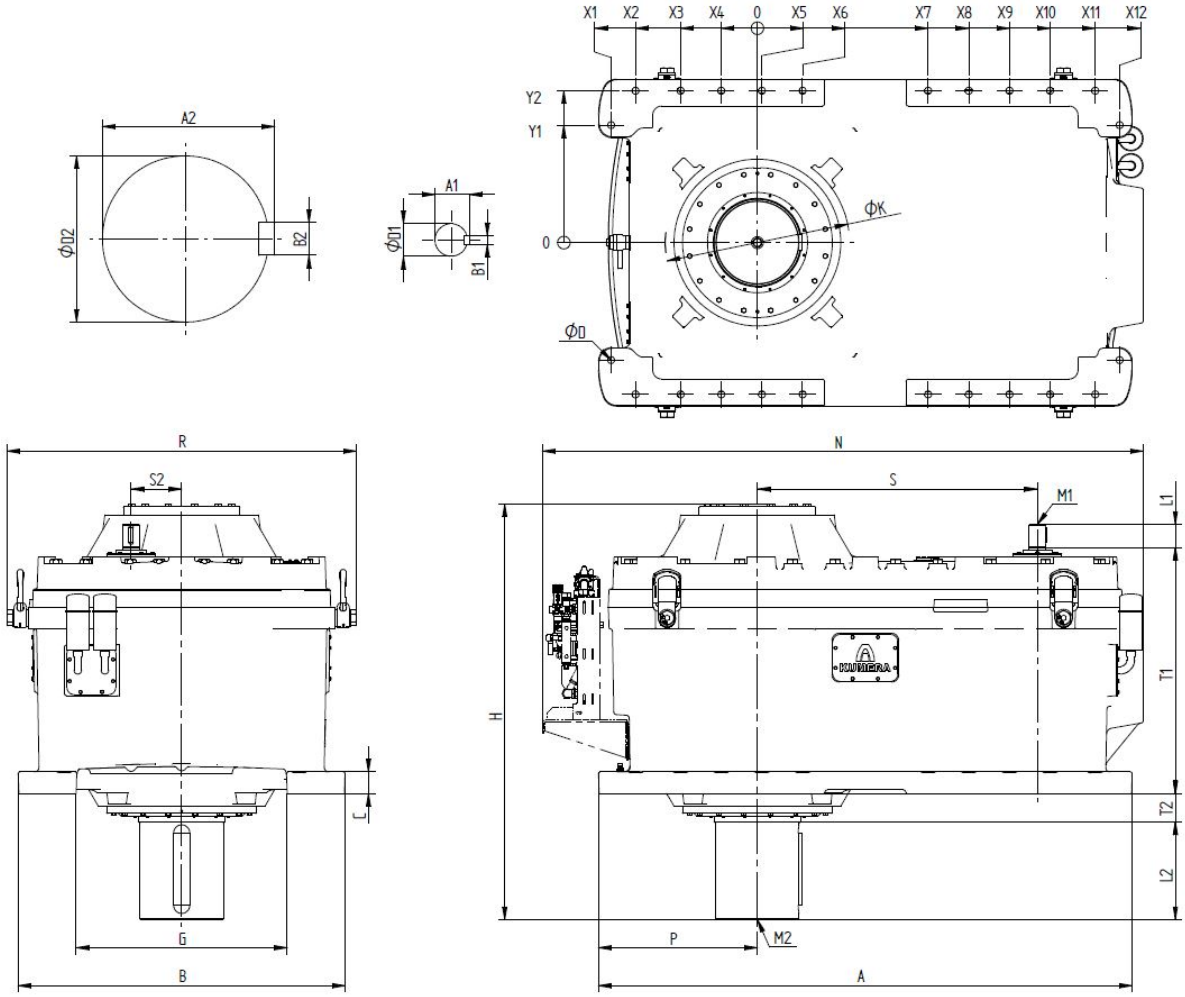

Size	X1	X2	X3	X4	X5	X6	X7	X8	X9	X10	X11	X12	Y1	Y2
560	580	525	340	155	30	215	585	770	955	1140	1325	1380	520	635
600	624	540	340	160	20	200	720	900	1080	1260	1460	1544	496	648
630	665	550	360	170	20	210	690	880	1070	1260	1450	1565	545	705
670	715	580	380	180	20	220	740	940	1140	1340	1540	1675	600	735
710	755	620	410	200	10	220	795	1005	1215	1425	1635	1770	615	775
750	780	675	425	200	25	250	900	1125	1350	1575	1825	1930	620	810
800	810	675	425	200	25	250	945	1170	1395	1620	1870	2005	650	840
850	905	760	505	250	5	260	1010	1265	1520	1775	2030	2175	695	900
900	925	770	505	240	25	290	1070	1335	1600	1865	2130	2285	750	975

Helical Gearboxes E-4000

E-series 560-900 Output shaft down

Size	A	B	C	ø D	G	H	ø K	N*	P	R	S	S2	T1	T2
560	2060	1360	90	33	950	1720	800	2570	630	1460	1085	200	995	160
600	2280	1400	100	33	880	1840	880	2760	680	1520	1160	212	1062	190
630	2320	1500	100	33	960	1920	880	2870	710	1630	1220	225	1170	168
670	2480	1560	100	39	1070	2050	920	2980	760	1710	1300	236	1196	185
710	2616	1640	120	39	1100	2200	950	3130	799	1790	1375	250	1258	218
750	2850	1750	120	39	1100	2400	980	3300	850	1870	1450	265	1320	280
800	2954	1809	120	39	1160	2300	1020	3500	880	1940	1550	280	1360	158
850	3190	1920	130	39	1250	2650	1200	3700	960	2040	1700	300	1500	230
900	3340	2070	130	45	1320	2730	1300	3830	990	2140	1800	315	1530	290

	Input shaft										Output shaft				
	i = 112:1-280:1					i = 315:1-630:1					D2	A2	B2	L2	M2
Size	D1	L1	A1	B1	M1	D1	L1	A1	B1	M1					
560	65	105	69	18	M20	50	82	53,5	16	M16	340	355	80	450	M48
600	65	105	69	18	M20	55	82	59	16	M20	360	375	80	450	M48
630	70	105	74,5	20	M20	55	82	59	16	M20	380	395	80	450	M48
670	75	105	79,5	20	M20	60	105	64	18	M20	400	417	90	500	M48
710	80	130	85	22	M20	65	105	69	18	M20	420	437	90	500	M48
750	85	130	90	22	M20	70	105	74,5	20	M20	440	457	90	540	M48
800	90	130	95	25	M24	75	105	79,5	20	M20	460	479	100	540	M48
850	95	130	100	25	M24	80	130	85	22	M20	480	499	100	540	M48
900	100	165	106	28	M24	85	130	90	22	M20	500	519	100	540	M48

* Dimension with water-cooled lubrication unit

Helical Gearboxes

E-4000

E-series 560-900

Output shaft up

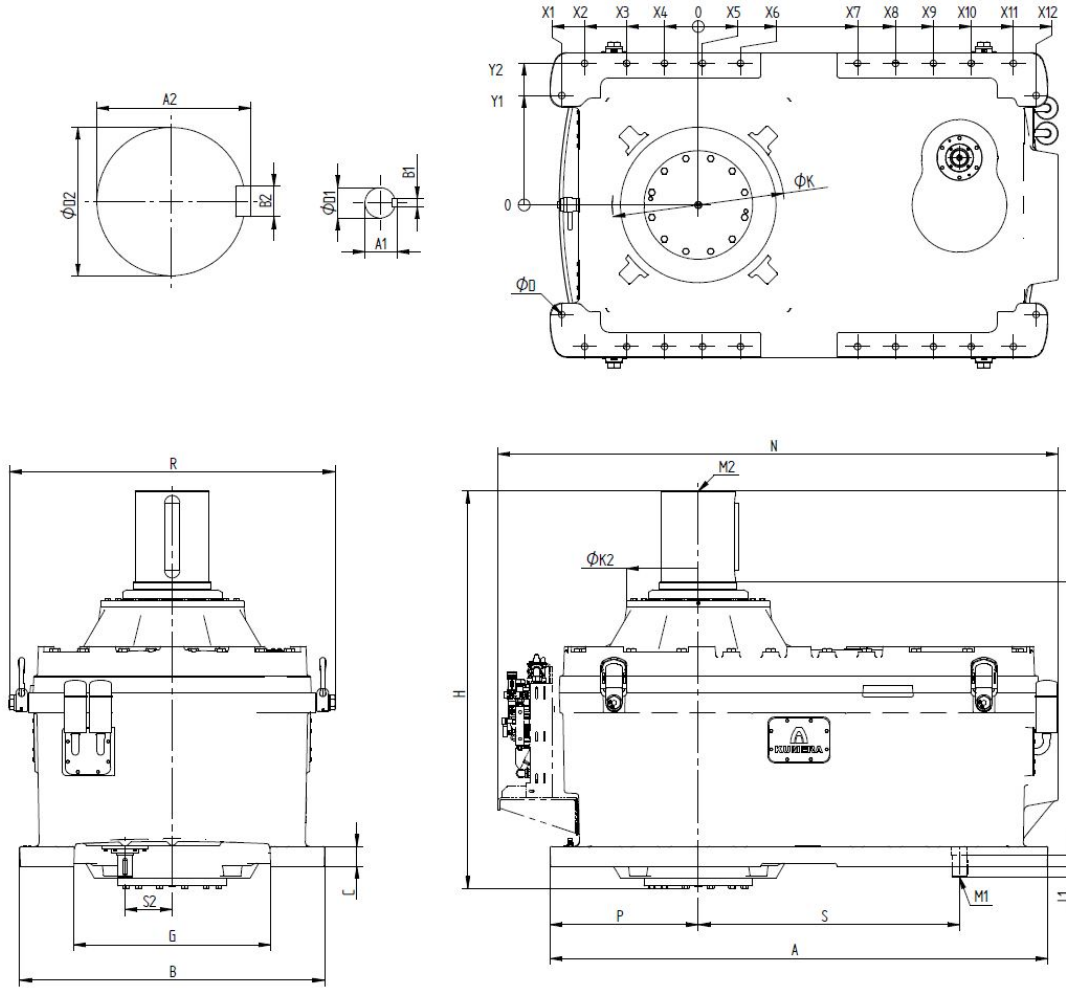

Size	X1	X2	X3	X4	X5	X6	X7	X8	X9	X10	X11	X12	Y1	Y2
560	580	525	340	155	30	215	585	770	955	1140	1325	1380	520	635
600	624	540	340	160	20	200	720	900	1080	1260	1460	1544	496	648
630	665	550	360	170	20	210	690	880	1070	1260	1450	1565	545	705
670	715	580	380	180	20	220	740	940	1140	1340	1540	1675	600	735
710	755	620	410	200	10	220	795	1005	1215	1425	1635	1770	615	775
750	780	675	425	200	25	250	900	1125	1350	1575	1825	1930	620	810
800	810	675	425	200	25	250	945	1170	1395	1620	1870	2005	650	840
850	905	760	505	250	5	260	1010	1265	1520	1775	2030	2175	695	900
900	925	770	505	240	25	290	1070	1335	1600	1865	2130	2285	750	975

Helical Gearboxes

E-4000

E-series 560-900

Output shaft up

Size	A	B	C	ø D	G	H	ø K	ø K2	N*	P	R	S	S2	T1	T2
560	2060	1360	90	33	950	1800	800	670	2570	630	1460	1085	200	20	1190
600	2280	1400	100	33	880	1860	880	710	2760	680	1520	1160	212	25	1260
630	2320	1500	100	33	960	2000	880	730	2870	710	1630	1220	225	10	1380
670	2480	1560	100	39	1070	2080	920	770	2980	760	1710	1300	236	30	1430
710	2616	1640	120	39	1100	2240	950	800	3130	799	1790	1375	250	30	1530
750	2850	1750	120	39	1100	2420	1100	830	3300	850	1870	1450	265	40	1620
800	2954	1809	120	39	1160	2360	1020	850	3500	880	1940	1550	280	69	1650
850	3190	1920	130	39	1250	2690	1200	1000	3700	960	2040	1700	300	60	1880
900	3340	2070	130	45	1320	2750	1300	1100	3830	990	2140	1800	315	70	1920

	Input shaft										Output shaft				
	i = 112:1-280:1					i = 315:1-630:1									
Size	D1	L1	A1	B1	M1	D1	L1	A1	B1	M1	D2	A2	B2	L2	M2
560	65	105	69	18	M20	50	82	53,5	16	M16	340	355	80	450	M48
600	65	105	69	18	M20	55	82	59	16	M20	360	375	80	450	M48
630	70	105	74,5	20	M20	55	82	59	16	M20	380	395	80	450	M48
670	75	105	79,5	20	M20	60	105	64	18	M20	400	417	90	500	M48
710	80	130	85	22	M20	65	105	69	18	M20	420	437	90	500	M48
750	85	130	90	22	M20	70	105	74,5	20	M20	440	457	90	540	M48
800	90	130	95	25	M24	75	105	79,5	20	M20	460	479	100	540	M48
850	95	130	100	25	M24	80	130	85	22	M20	480	499	100	540	M48
900	100	165	106	28	M24	85	130	90	22	M20	500	519	100	540	M48

* Dimension with water-cooled lubrication unit

Bevel-Helical Gearboxes

E-3000

E-series 560-900

Output shaft down

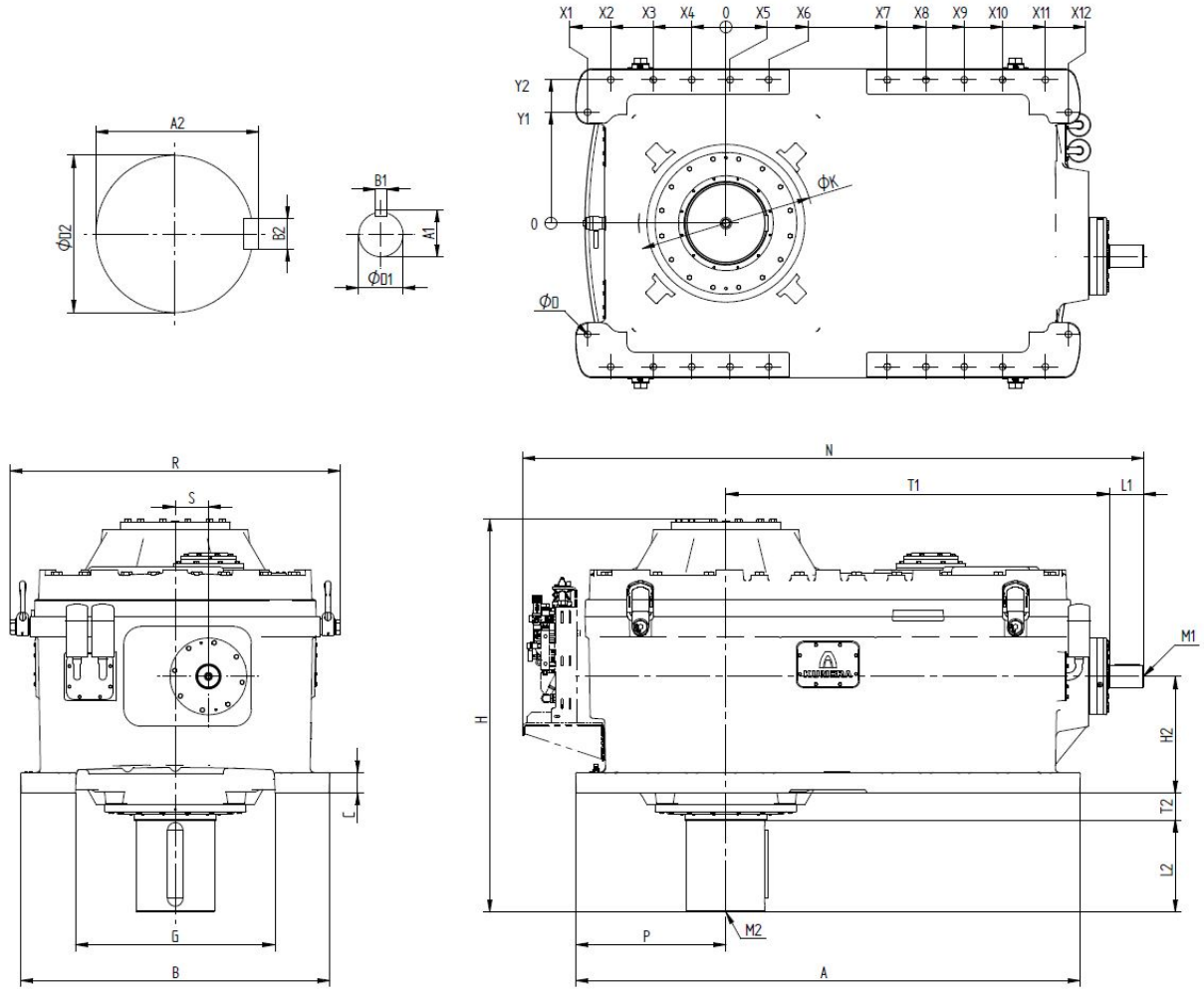

Size	X1	X2	X3	X4	X5	X6	X7	X8	X9	X10	X11	X12	Y1	Y2
560	580	525	340	155	30	215	585	770	955	1140	1325	1380	520	635
600	624	540	340	160	20	200	720	900	1080	1260	1460	1544	496	648
630	665	550	360	170	20	210	690	880	1070	1260	1450	1565	545	705
670	715	580	380	180	20	220	740	940	1140	1340	1540	1675	600	735
710	755	620	410	200	10	220	795	1005	1215	1425	1635	1770	615	775
750	780	675	425	200	25	250	900	1125	1350	1575	1825	1930	620	810
800	810	675	425	200	25	250	945	1170	1395	1620	1870	2005	650	840
850	*	*	*	*	*	*	*	*	*	*	*	*	*	*
900	*	*	*	*	*	*	*	*	*	*	*	*	*	*

Bevel-Helical Gearboxes E-3000

E-series 560-900 Output shaft down

Size	A	B	C	ø D	G	H	H2	ø K	N**	P	R	S	T1	T2
560	2060	1360	90	33	950	1720	490	800	2870	630	1460	150	1649	160
600	2280	1400	100	33	880	1840	530	840	3060	680	1520	165	1810	190
630	2320	1500	100	33	960	1920	575	880	3170	710	1630	170	1855	168
670	2480	1560	100	39	1070	2050	595	920	3360	760	1710	162	2007	185
710	2616	1640	120	39	1100	2200	632	950	3470	799	1790	175	2066	218
750	2850	1750	120	39	1100	2400	662	1100	3680	850	1870	180	2181	280
800	2954	1809	120	39	1160	2300	682	1020	3790	880	1940	194	2245	158
850	*	*	*	*	*	*	*	*	*	*	*	*	*	*
900	*	*	*	*	*	*	*	*	*	*	*	*	*	*

	Input shaft										Output shaft				
	i = 22,4:1-56:1					i = 63:1-100:1									
Size	**D1**	**L1**	**A1**	**B1**	**M1**	**D1**	**L1**	**A1**	**B1**	**M1**	**D2**	**A2**	**B2**	**L2**	**M2**
560	110	165	116	28	M24	90	130	95	25	M24	340	355	80	450	M48
600	120	165	127	32	M24	100	165	106	28	M24	360	375	80	450	M48
630	120	165	127	32	M24	100	165	106	28	M24	380	395	80	450	M48
670	140	200	148	36	M30	110	165	116	28	M24	400	417	90	500	M48
710	140	200	148	36	M30	110	165	116	28	M24	420	437	90	500	M48
750	160	240	169	40	M30	120	165	127	32	M24	440	457	90	540	M48
800	160	240	169	40	M30	120	165	127	32	M24	460	479	100	540	M48
850	*	*	*	*	*	*	*	*	*	*	*	*	*	*	*
900	*	*	*	*	*	*	*	*	*	*	*	*	*	*	*

* Dimensions on request

** Dimension with water-cooled lubrication unit

Bevel-Helical Gearboxes E-3000

E-series 560-900 Output shaft up

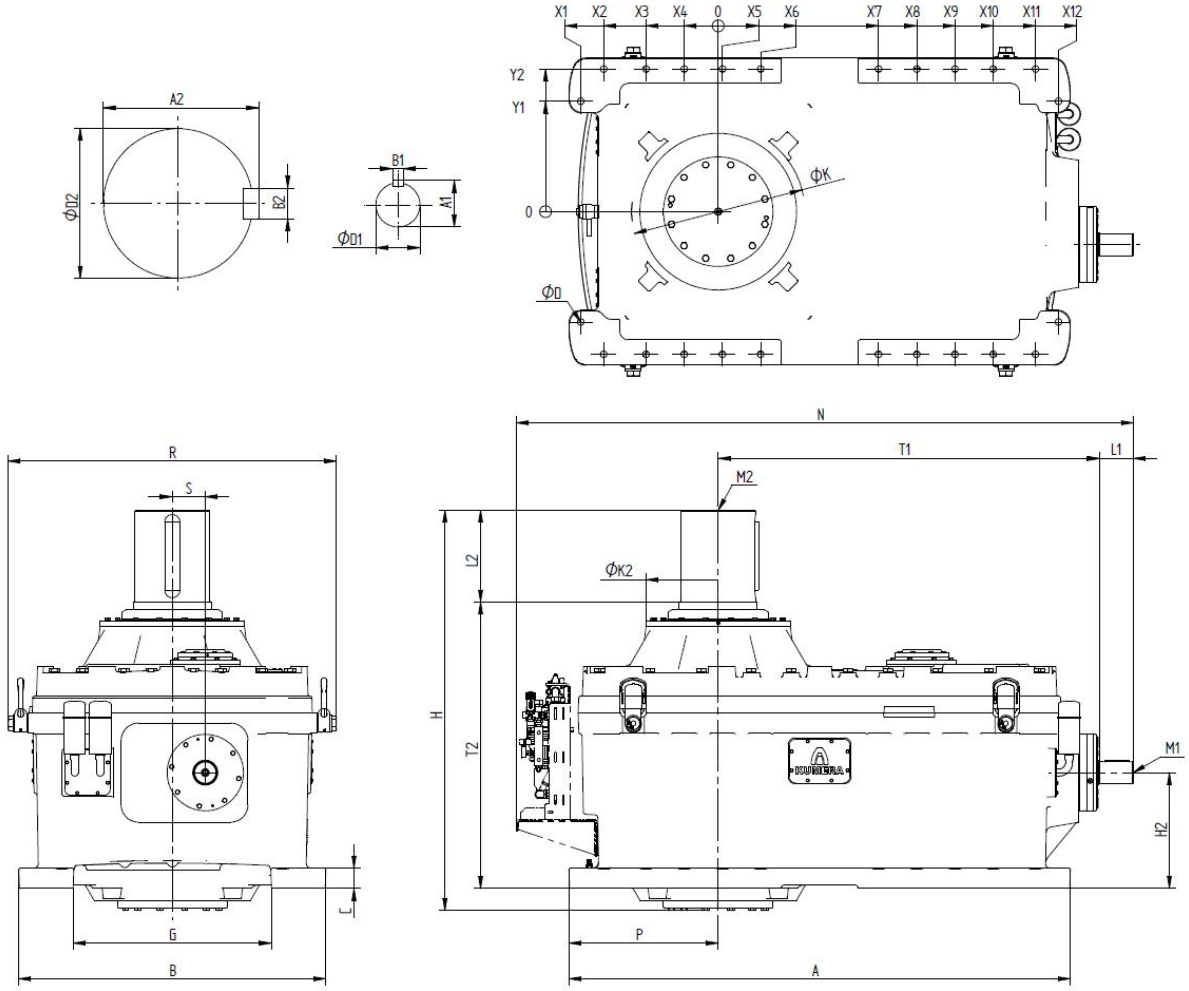

Size	X1	X2	X3	X4	X5	X6	X7	X8	X9	X10	X11	X12	Y1	Y2
560	580	525	340	155	30	215	585	770	955	1140	1325	1380	520	635
600	624	540	340	160	20	200	720	900	1080	1260	1460	1544	496	648
630	665	550	360	170	20	210	690	880	1070	1260	1450	1565	545	705
670	715	580	380	180	20	220	740	940	1140	1340	1540	1675	600	735
710	755	620	410	200	10	220	795	1005	1215	1425	1635	1770	615	775
750	780	675	425	200	25	250	900	1125	1350	1575	1825	1930	620	810
800	810	675	425	200	25	250	945	1170	1395	1620	1870	2005	650	840
850	*	*	*	*	*	*	*	*	*	*	*	*	*	*
900	*	*	*	*	*	*	*	*	*	*	*	*	*	*

Bevel-Helical Gearboxes E-3000

E-series 560-900 Output shaft up

Size	A	B	C	ø D	G	H	H2	ø K	ø K2	N**	P	R	S	T1	T2
560	2060	1360	90	33	950	1800	490	800	670	2870	630	1460	150	1649	1190
600	2280	1400	100	33	880	1860	530	880	710	3060	680	1520	165	1810	1260
630	2320	1500	100	33	960	2000	575	880	730	3170	710	1630	170	1855	1380
670	2480	1560	100	39	1070	2080	595	920	770	3360	760	1710	162	2007	1430
710	2616	1640	120	39	1100	2240	632	950	800	3470	799	1790	175	2066	1530
750	2850	1750	120	39	1100	2420	662	1100	830	3680	850	1870	180	2181	1620
800	2954	1809	120	39	1160	2360	682	1020	850	3790	880	1940	194	2245	1650
850	*	*	*	*	*	*	*	*	*	*	*	*	*	*	*
900	*	*	*	*	*	*	*	*	*	*	*	*	*	*	*

	Input shaft										Output shaft				
	i = 22,4:1-56:1					i = 63:1-100:1					D2	A2	B2	L2	M2
Size	**D1**	**L1**	**A1**	**B1**	**M1**	**D1**	**L1**	**A1**	**B1**	**M1**					
560	110	165	116	28	M24	90	130	95	25	M24	340	355	80	450	M48
600	120	165	127	32	M24	100	165	106	28	M24	360	375	80	450	M48
630	120	165	127	32	M24	100	165	106	28	M24	380	395	80	450	M48
670	140	200	148	36	M30	110	165	116	28	M24	400	417	90	500	M48
710	140	200	148	36	M30	110	165	116	28	M24	420	437	90	500	M48
750	160	240	169	40	M30	120	165	127	32	M24	440	457	90	540	M48
800	160	240	169	40	M30	120	165	127	32	M24	460	479	100	540	M48
850	*	*	*	*	*	*	*	*	*	*	*	*	*	*	*
900	*	*	*	*	*	*	*	*	*	*	*	*	*	*	*

* Dimensions on request

** Dimension with water-cooled lubrication unit

Bevel-Helical Gearboxes

E-4000

E-series 560-900

Output shaft down

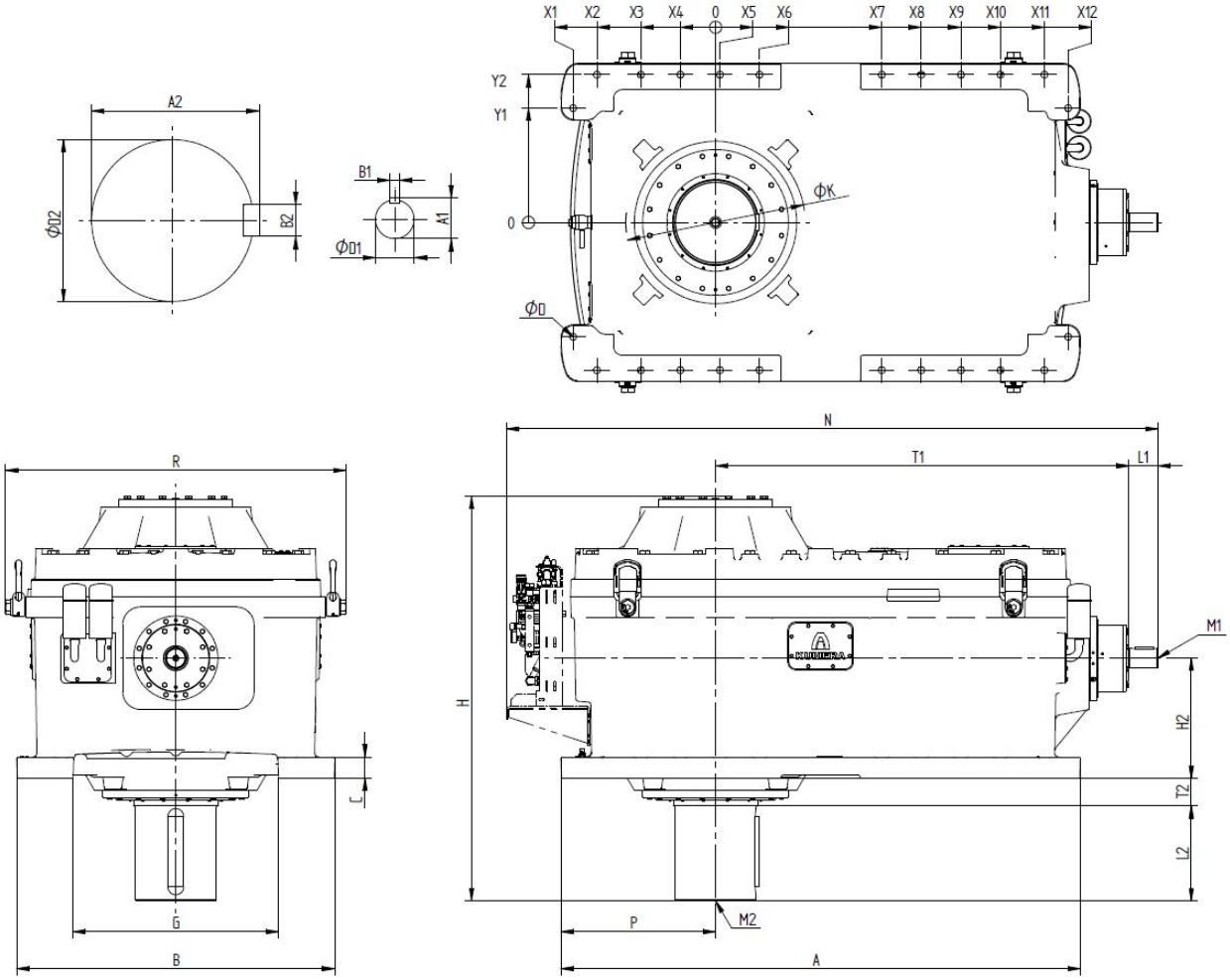

Size	X1	X2	X3	X4	X5	X6	X7	X8	X9	X10	X11	X12	Y1	Y2
560	580	525	340	155	30	215	585	770	955	1140	1325	1380	520	635
600	624	540	340	160	20	200	720	900	1080	1260	1460	1544	496	648
630	665	550	360	170	20	210	690	880	1070	1260	1450	1565	545	705
670	715	580	380	180	20	220	740	940	1140	1340	1540	1675	600	735
710	755	620	410	200	10	220	795	1005	1215	1425	1635	1770	615	775
750	780	675	425	200	25	250	900	1125	1350	1575	1825	1930	620	810
800	810	675	425	200	25	250	945	1170	1395	1620	1870	2005	650	840
850	*	*	*	*	*	*	*	*	*	*	*	*	*	*
900	*	*	*	*	*	*	*	*	*	*	*	*	*	*

Bevel-Helical Gearboxes E-4000

E-series 560-900 Output shaft down

Size	A	B	C	ø D	G	H	H2	ø K	N**	P	R	T1	T2
560	2060	1360	90	33	950	1720	490	800	2850	630	1460	1670	160
600	2280	1400	100	33	880	1840	530	880	2960	680	1520	1745	190
630	2320	1500	100	33	960	1920	575	880	3140	710	1630	1865	168
670	2480	1560	100	39	1070	2050	595	920	3230	760	1710	1945	185
710	2616	1640	120	39	1100	2200	632	950	3460	799	1790	2090	218
750	2850	1750	120	39	1100	2400	662	1100	3580	850	1870	2165	280
800	2954	1809	120	39	1160	2300	682	1020	3820	880	1940	2350	158
850	*	*	*	*	*	*	*	*	*	*	*	*	*
900	*	*	*	*	*	*	*	*	*	*	*	*	*

	Input shaft										Output shaft				
	i = 112:1-180:1					i = 200:1-560:1					D2	A2	B2	L2	M2
Size	**D1**	**L1**	**A1**	**B1**	**M1**	**D1**	**L1**	**A1**	**B1**	**M1**					
560	80	130	85	22	M20	65	105	69	18	M20	340	355	80	450	M48
600	85	130	90	22	M20	70	105	74,5	20	M20	360	375	80	450	M48
630	90	130	95	25	M24	75	105	79,5	20	M20	380	395	80	450	M48
670	95	130	100	25	M24	80	130	85	22	M20	400	417	90	500	M48
710	100	165	106	28	M24	85	130	90	22	M20	420	437	90	500	M48
750	100	165	106	28	M24	85	130	90	22	M20	440	457	90	540	M48
800	110	165	116	28	M24	95	130	100	25	M24	460	479	100	540	M48
850	*	*	*	*	*	*	*	*	*	*	*	*	*	*	*
900	*	*	*	*	*	*	*	*	*	*	*	*	*	*	*

* Dimensions on request

** Dimension with water-cooled lubrication unit

Bevel-Helical Gearboxes

E-4000

E-series 560-900

Output shaft up

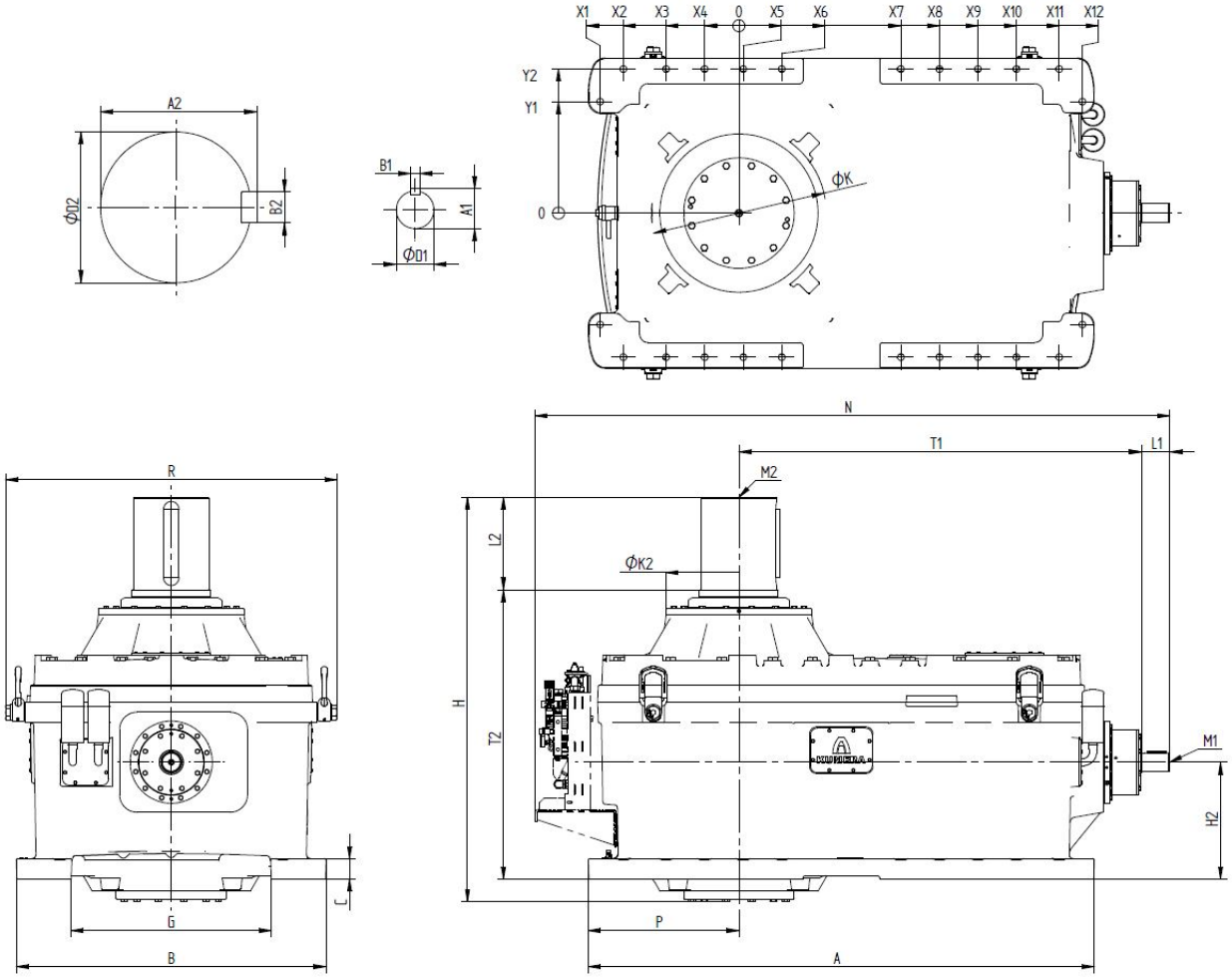

Size	X1	X2	X3	X4	X5	X6	X7	X8	X9	X10	X11	X12	Y1	Y2
560	580	525	340	155	30	215	585	770	955	1140	1325	1380	520	635
600	624	540	340	160	20	200	720	900	1080	1260	1460	1544	496	648
630	665	550	360	170	20	210	690	880	1070	1260	1450	1565	545	705
670	715	580	380	180	20	220	740	940	1140	1340	1540	1675	600	735
710	755	620	410	200	10	220	795	1005	1215	1425	1635	1770	615	775
750	780	675	425	200	25	250	900	1125	1350	1575	1825	1930	620	810
800	810	675	425	200	25	250	945	1170	1395	1620	1870	2005	650	840
850	*	*	*	*	*	*	*	*	*	*	*	*	*	*
900	*	*	*	*	*	*	*	*	*	*	*	*	*	*

Bevel-Helical Gearboxes

E-4000

E-series 560-900

Output shaft up

Size	A	B	C	ø D	G	H	H2	ø K	ø K2	N**	P	R	T1	T2
560	2060	1360	90	33	950	1800	490	800	670	2850	630	1460	1670	1190
600	2280	1400	100	33	880	1860	530	880	710	2960	680	1520	1745	1260
630	2320	1500	100	33	960	2000	575	880	730	3140	710	1630	1865	1380
670	2480	1560	100	39	1070	2080	595	920	770	3230	760	1710	1945	1430
710	2616	1640	120	39	1100	2240	632	950	800	3460	799	1790	2090	1530
750	2850	1750	120	39	1100	2420	662	1100	830	3580	850	1870	2165	1620
800	2954	1809	120	39	1160	2360	682	1020	850	3820	880	1940	2350	1650
850	*	*	*	*	*	*	*	*	*	*	*	*	*	*
900	*	*	*	*	*	*	*	*	*	*	*	*	*	*

	Input shaft										Output shaft				
	i = 112:1-180:1					i = 200:1-560:1					D2	A2	B2	L2	M2
Size	**D1**	**L1**	**A1**	**B1**	**M1**	**D1**	**L1**	**A1**	**B1**	**M1**					
560	80	130	85	22	M20	65	105	69	18	M20	340	355	80	450	M48
600	85	130	90	22	M20	70	105	74,5	20	M20	360	375	80	450	M48
630	90	130	95	25	M24	75	105	79,5	20	M20	380	395	80	450	M48
670	95	130	100	25	M24	80	130	85	22	M20	400	417	90	500	M48
710	100	165	106	28	M24	85	130	90	22	M20	420	437	90	500	M48
750	100	165	106	28	M24	85	130	90	22	M20	440	457	90	540	M48
800	110	165	116	28	M24	95	130	100	25	M24	460	479	100	540	M48
850	*	*	*	*	*	*	*	*	*	*	*	*	*	*	*
900	*	*	*	*	*	*	*	*	*	*	*	*	*	*	*

* Dimensions on request

** Dimension with water-cooled lubrication unit

E-series 560-900 Gearboxes, Output shaft dimension table

SE-3000
SE-4000

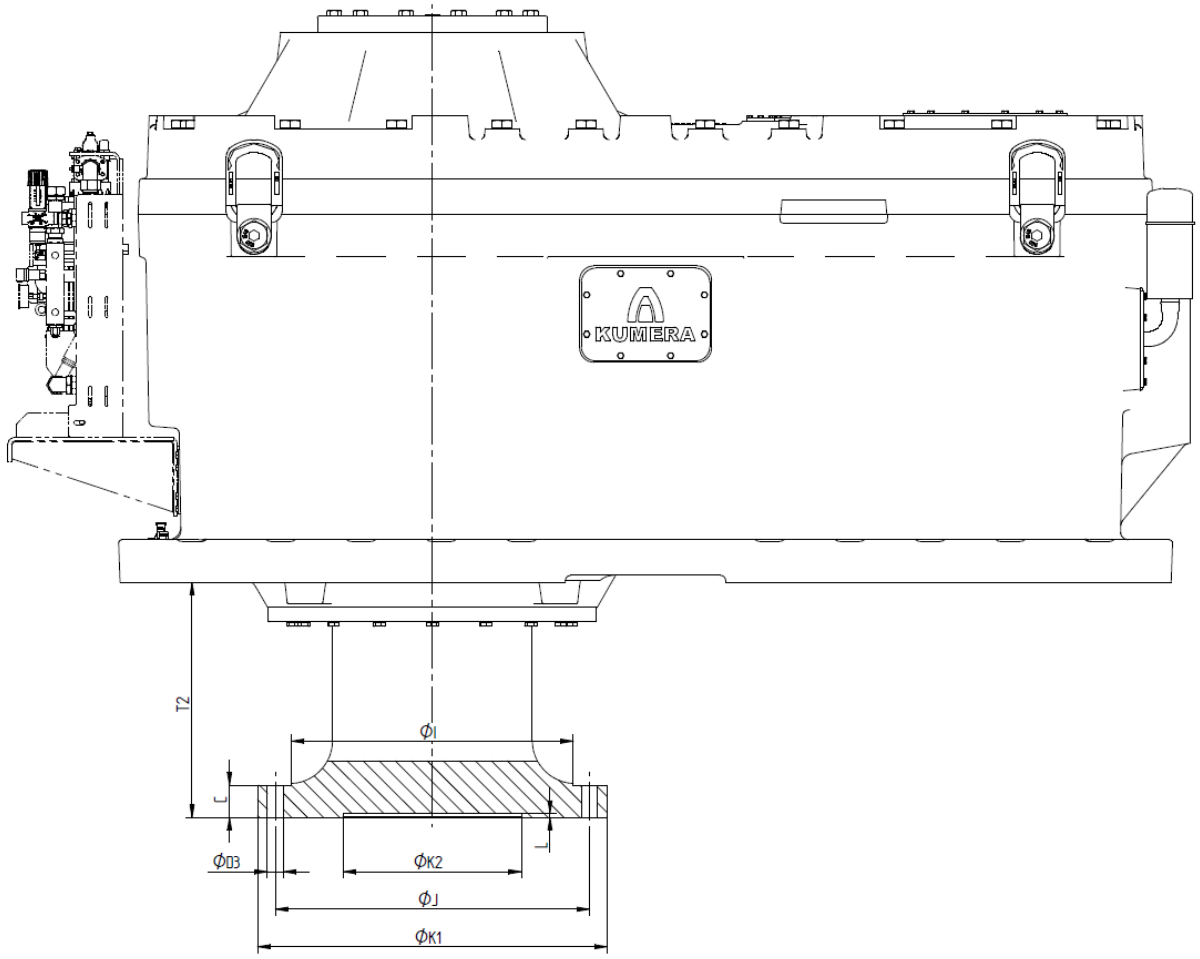

Size	C	ø D3	ø I	ø J	ø K1	ø K2	L	T2
560	75	18x ø39	580	650	730	370	12	493
600	75	20x ø39	610	690	770	400	12	545
630	75	21x ø39	640	730	820	420	12	553
670	75	24x ø39	680	770	860	440	12	615
710	75	28x ø39	720	810	900	460	12	668
750	90	24x ø45	750	840	940	480	12	751
800	90	26x ø45	780	880	980	500	12	651
850	*	*	*	*	*	*	*	*
900	*	*	*	*	*	*	*	*

* Dimensions on request

Helical Gearboxes

E-series 315-530, Installation plate

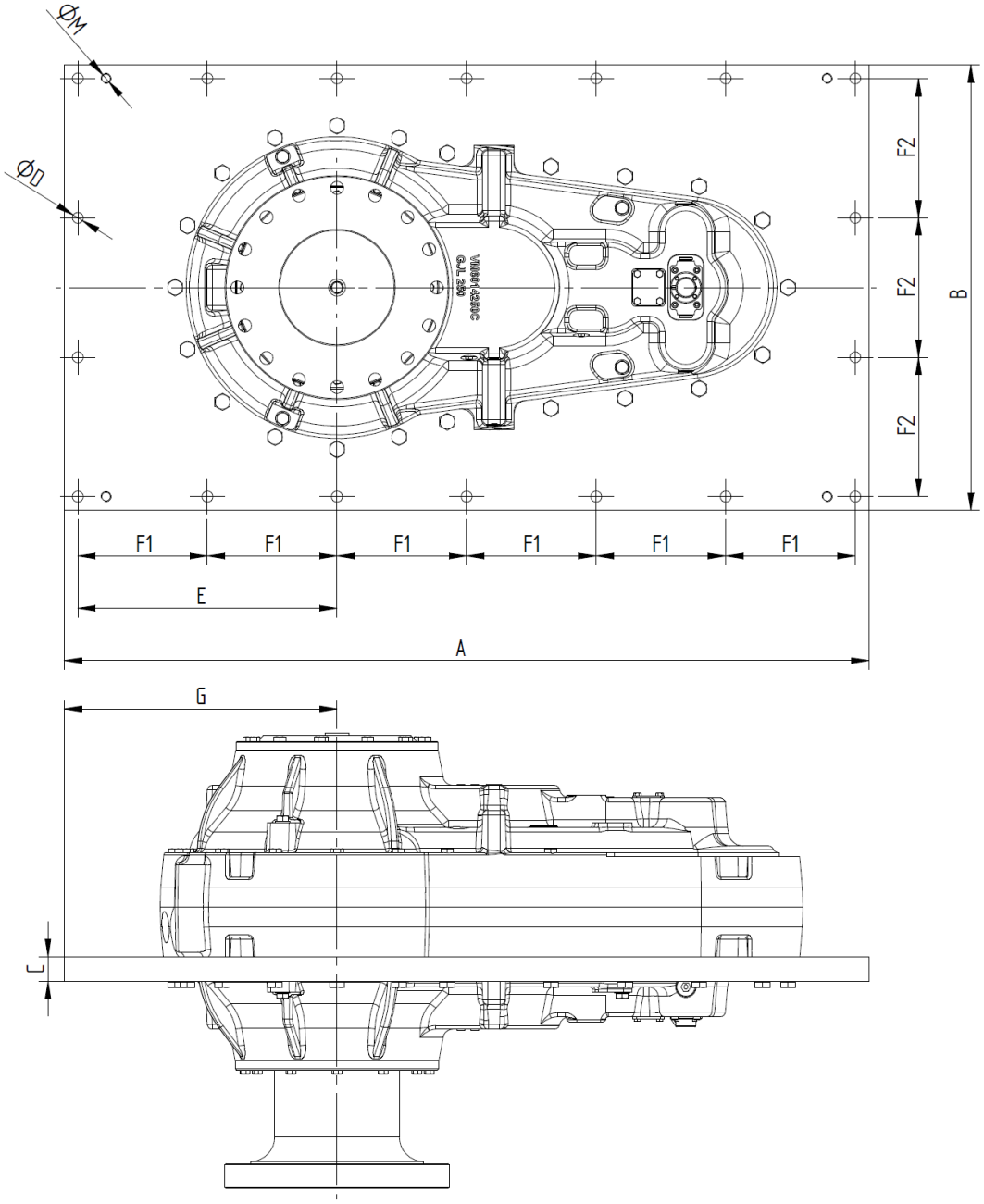

Size	A	B	C	ø D	E	F1	F2	G	ø M
315	1615	895	50	18 x ø22	520	260	280	547,5	4 x M20
355	1765	985	50	18 x ø22	565	285	310	592,5	4 x M20
400	1960	1120	50	18 x ø26	605	315	350	640	4 x M24
425	2025	1185	70	18 x ø26	620	325	370	657,5	4 x M24
450	2145	1245	70	18 x ø26	660	345	390	697,5	4 x M24
475	2260	1300	70	18 x ø33	700	365	410	735	4 x M30
500	2435	1400	70	18 x ø33	740	390	435	787,5	4 x M30
530	2575	1525	70	18 x ø39	780	410	470	837,5	4 x M36

Bevel-Helical Gearboxes

UF-3000

i = 11,2:1 – 100:1

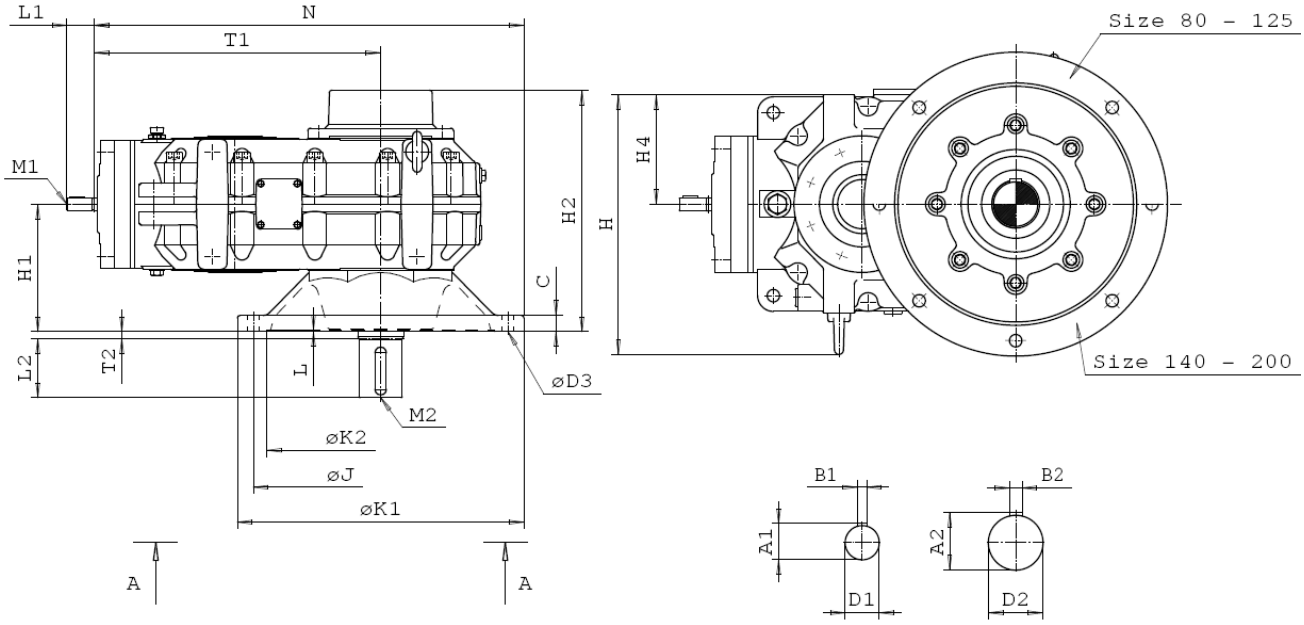

Size	C	D3	H	H1	H2	H4	J	K1	K2	L	N	T1	T2	Output shaft D2	L2	A2	B2	M2
80	12	11	224	112	224	90	225	260	190H9	4	380	250	0	55m6	82	59	16	M20x42
90	14	11	250	125	250	100	250	285	215H9	4	405	280	0	65m6	105	69	18	M20x42
100	16	14	280	140	280	112	280	320	240H9	4	460	320	0	70m6	105	74,5	20	M20x42
112	18	14	310	160	310	125	315	355	275H9	4	518	360	0	80m6	130	85	22	M20x42
125	20	18	345	180	345	140	355	400	310H9	4	578	400	0	90m6	130	95	25	M24x50
140	22	18	385	200	385	160	400	445	355H9	4	650	450	0	100m6	165	106	28	M24x50
160	25	22	430	225	430	180	450	500	400H9	4	725	500	0	110m6	165	116	28	M24x50
180	28	22	480	250	480	200	500	550	450H9	4	810	560	0	120m6	165	127	32	M24x50
200	36	26	530	280	530	225	560	630	500H9	6	910	630	0	140m6	200	148	36	M30x60

Size	Input shaft																			
	i = 11,2:1 - 22,4:1					i = 25:1 - 45:1					i = 50:1 - 80:1					i = 90:1 - 100:1				
	D1	L1	A1	B1	M1	D1	L1	A1	B1	M1	D1	L1	A1	B1	M1	D1	L1	A1	B1	M1
80	16k6	40	18	5	M5x12,5	14k6	30	16	5	M5x12,5	14k6	30	16	5	M5x12,5	11k6	23	12,5	4	M4x10
90	19k6	40	21,5	6	M6x16	16k6	40	18	5	M5x12,5	16k6	40	18	5	M5x12,5	14k6	30	16	5	M5x12,5
100	24k6	50	27	8	M8x19	19k6	40	21,5	6	M6x16	16k6	40	18	5	M5x12,5	14k6	30	16	5	M5x12,5
112	24k6	50	27	8	M8x19	24k6	50	27	8	M8x19	19k6	40	21,5	6	M6x16	16k6	40	18	5	M5x12,5
125	28k6	60	31	8	M10x22	24k6	50	27	8	M8x19	24k6	50	27	8	M8x19	19k6	40	21,5	6	M6x16
140	32k6	80	35	10	M12x28	28k6	60	31	8	M10x22	24k6	50	27	8	M8x19	19k6	40	21,5	6	M6x16
160	38k6	80	41	10	M12x28	32k6	80	35	10	M12x28	28k6	60	31	8	M10x22	24k6	50	27	8	M8x19
180	42k6	82	45	12	M16x36	38k6	80	41	10	M12x28	32k6	80	35	10	M12x28	28k6	60	31	8	M10x22
200	48k6	82	51,5	14	M16x36	42k6	82	45	12	M16x36	38k6	80	41	10	M12x28	32k6	80	35	10	M12x28

Motor adapters for Helical Gearboxes

F-series

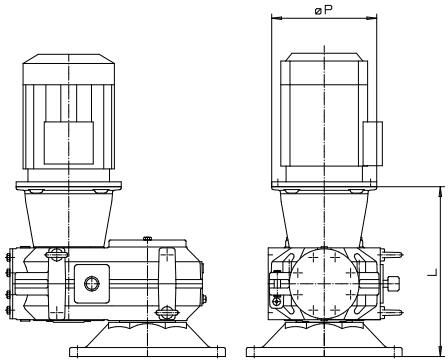

SF-2000 / 3000 / 4000

Motor IEC	P	i	L Gearbox size 80	90	100	112	125	140	160	180	200
14F130	160	5,6:1 - 16:1	254								
		18:1 - 20:1	254								
		22,4:1 - 71:1	254								
		80:1 - 100:1	254								
		112:1 - 280:1									
		315:1 - 400:1									
19F165	200	5,6:1 - 16:1	264	284,5	317						
		18:1 - 20:1	264	284,5	317						
		22,4:1 - 71:1	264	284,5	317						
		80:1 - 100:1	264	284,5	317						
		112:1 - 280:1					367	407			
		315:1 - 400:1					367	407			
24F165	200	5,6:1 - 16:1	274	294,5	327	357	397				
		18:1 - 20:1	274	294,5	317	357	387				
		22,4:1 - 71:1	264	294,5	317	347	387				
		80:1 - 100:1	264	284,5	317	347	387				
		112:1 - 280:1					377	407	444,5	492	
		315:1 - 400:1					367	407	444,5	492	
28F215	250	5,6:1 - 16:1	284	304,5	337	367	407	457	494,5	534	
		18:1 - 20:1	284	304,5	337	367	407	457	494,5	534	
		22,4:1 - 71:1	284	304,5	337	367	407	457	494,5	534	
		80:1 - 100:1	284	304,5	337	367	407	457	494,5	534	
		112:1 - 280:1					387	427	464,5	512	577
		315:1 - 400:1					387	427	464,5	512	577
38F265	300	5,6:1 - 16:1		324,5	357	387	427	477	514,5	554	602
		18:1 - 20:1		324,5	347	387	417	477	514,5	554	602
		22,4:1 - 71:1		324,5	347	377	417	477	514,5	554	602
		80:1 - 100:1		314,5	347	377	417	477	514,5	554	602
		112:1 - 280:1					407	437	474,5	522	597
		315:1 - 400:1					397	437	474,5	522	597
42/48F300	350	5,6:1 - 16:1				417	457	507	544,5	584	632
		18:1 - 20:1				417	447	507	544,5	584	632
		22,4:1 - 71:1				407	447	507	544,5	584	632
		80:1 - 100:1				407	447	507	544,5	584	632
		112:1 - 280:1							504,5	552	627
		315:1 - 400:1							504,5	552	627
55F350	400	5,6:1 - 16:1							544,5	584	632
		18:1 - 20:1							544,5	584	632
		22,4:1 - 71:1							544,5	584	632
		80:1 - 100:1							544,5	584	632
		112:1 - 280:1									
		315:1 - 400:1									
60F400	450	5,6:1 - 16:1								614	662
		18:1 - 20:1								614	662
		22,4:1 - 71:1								614	662
		80:1 - 100:1								614	662
		112:1 - 280:1									
		315:1 - 400:1									

Motor adapters for Helical Gearboxes

G-series

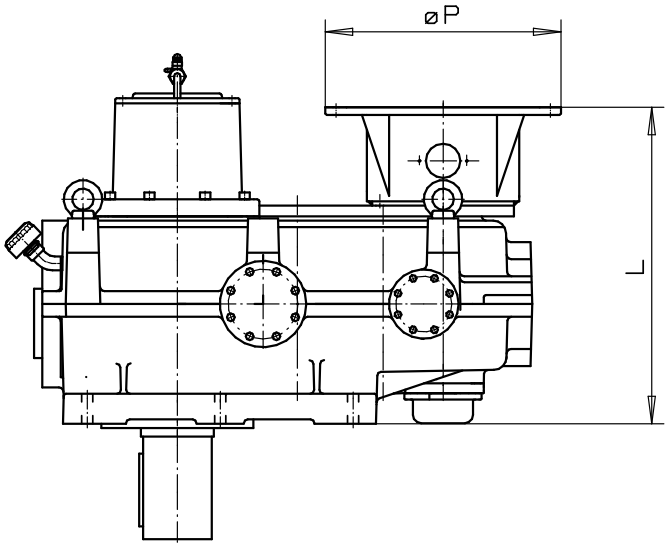

Motor IEC	P	L					
		Gearbox size					
		2225	2250	2280	2315	2355	2400
60F400	450	670	715				
65/75F500	550		715	765	825		
80/90F600	660				885	950	1020

Motor IEC	P	L					
		Gearbox size					
		3225	3250	3280	3315	3355	3400
38F265	300	585					
42/48F300	350	615	660	710	772		
55F350	400	615	660	710	795	860	
60F400	450	645	690	740	825	890	960
65/75F500	550		690	740	825	890	960
80/90F600	660				855	920	1020

Motor adapters for Helical Gearboxes

E-series 315-530

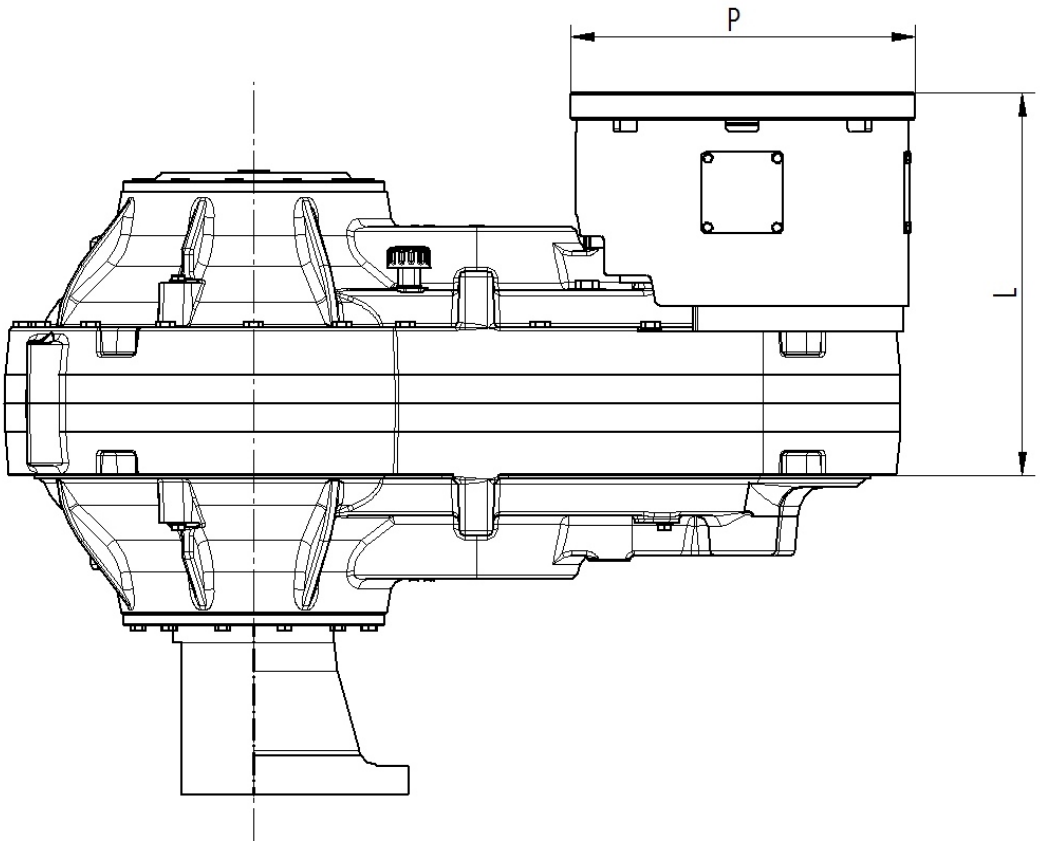

Motor IEC	P	i	L							
			Gearbox size							
			3315	3355	3400	3425	3450	3475	3500	3530
55F350	400	22,4:1 - 56:1	539							
55F350	400	63:1 - 100:1	539							
60F400	450	22,4:1 - 56:1	569	629						
60F400	450	63:1 - 100:1	569	606						
65/75F500	550	22,4:1 - 56:1	569	629						
65/75F500	550	63:1 - 100:1	569	606						
80/90F600	660	22,4:1 - 56:1	607	660	705	728	755	808	834	864
80/90F600	660	63:1 - 100:1	607	655	700	723	750	788	814	844
100F740	800	22,4:1 - 56:1			750	773	816	849	874	914
100F740	800	63:1 - 100:1			750	773	816	844	869	914
110F940	1000	22,4:1 - 56:1							874	914
110F940	1000	63:1 - 100:1							869	914
120F1080	1150	22,4:1 - 56:1								
120F1080	1150	63:1 - 100:1								

The motor adapters L-dimension are qualified with the E-series standard couplings.

Motor adapters for Helical Gearboxes

E-series 3560-3900

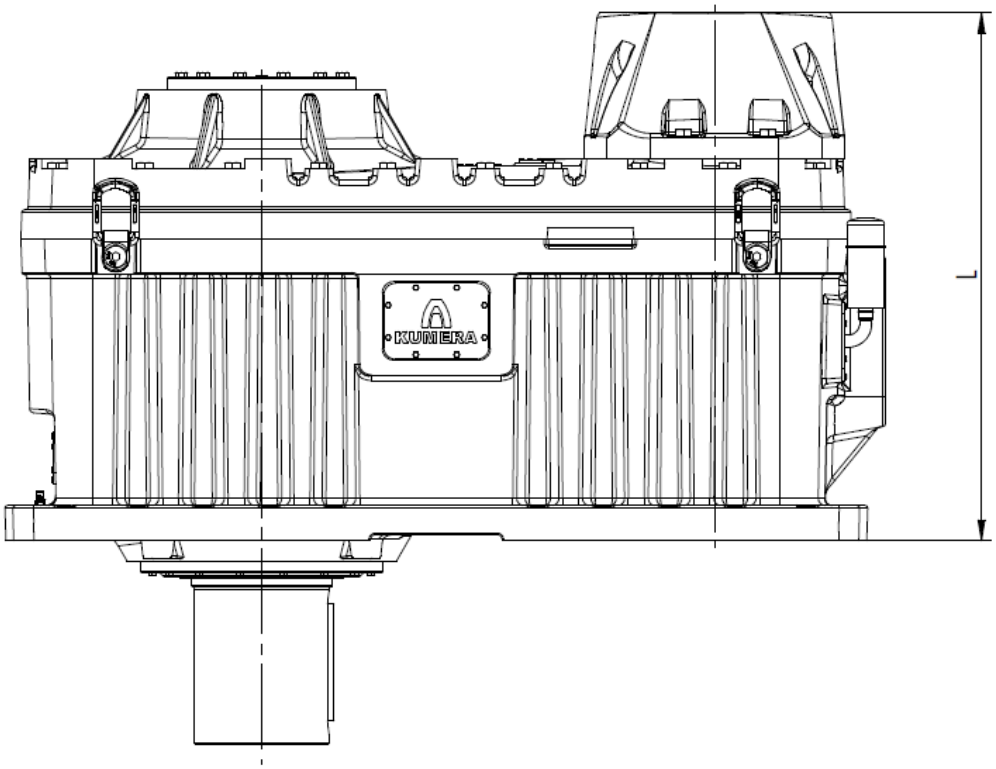

Motor IEC	i	L								
		Gearbox size								
		3560	3600	3630	3670	3710	3750	3800	3850	3900
80/90F600	22,4:1 - 56:1	1301	1403							
80/90F600	63:1 - 100:1	1276	1368							
100F740	22,4:1 - 56:1	1341	1443	1551	1577	1639	1736	1776	1916	1986
100F740	63:1 - 100:1	1316	1408	1516	1577	1639	1701	1741	1916	1946
110F940	22,4:1 - 56:1	1341	1443	1551	1577	1639	1736	1776	1916	1986
110F940	63:1 - 100:1		1408	1516	1577	1639	1701	1741	1916	1946
120F1080	22,4:1 - 56:1			1551	1577	1639	1736	1776	1916	1986
120F1080	63:1 - 100:1				1577	1639	1701	1741	1916	1946

The motor adapters L-dimension are qualified with the E-series standard couplings.

Motor adapters for Helical Gearboxes

E-series 4560-4900

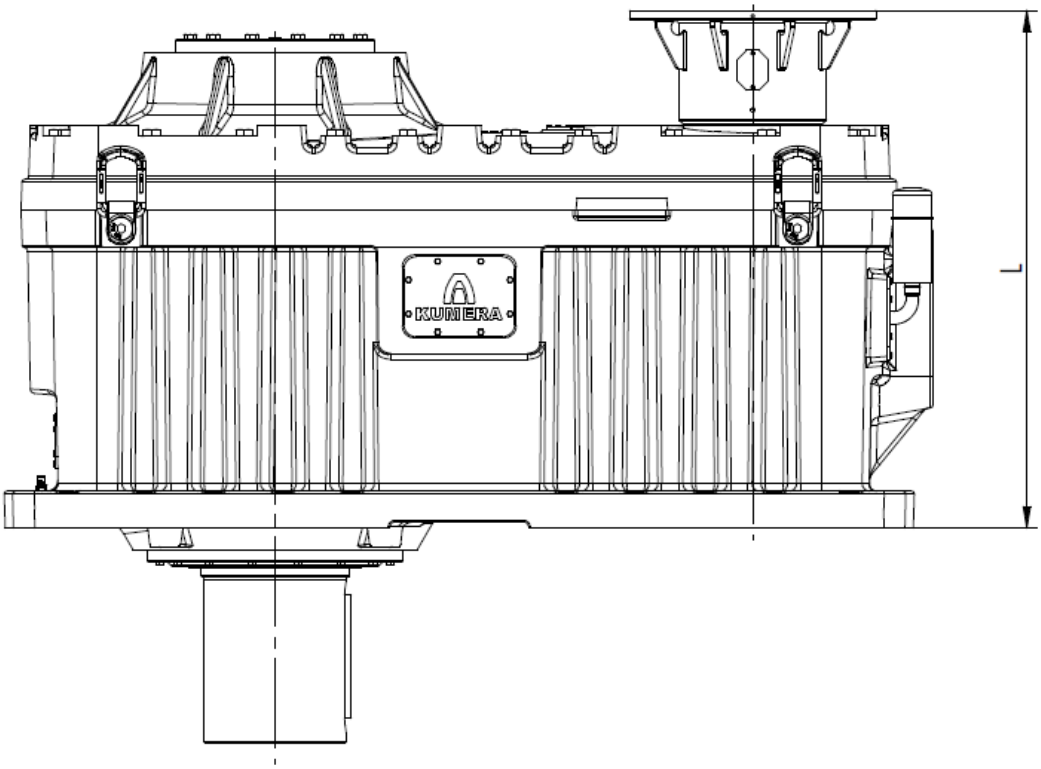

Motor IEC	i	L								
		Gearbox size								
		4560	4600	4630	4670	4710	4750	4800	4850	4900
55F350	112:1 - 280:1	1215	1282							
55F350	315:1 - 630:1	1192	1259							
60F400	112:1 - 280:1	1245	1312	1420						
60F400	315:1 - 630:1	1222	1289	1397	1446					
65/75F500	112:1 - 280:1	1245	1312	1420	1446	1533	1595	1635	1775	
65/75F500	315:1 - 630:1	1222	1289	1397	1446	1508	1570	1610	1775	
80/90F600	112:1 - 280:1	1276	1343	1451	1477	1564	1626	1666	1806	1871
80/90F600	315:1 - 630:1		1320	1428	1477	1539	1601	1641	1806	1836
100F740	112:1 - 280:1	1316	1383	1491	1517	1604	1666	1706	1846	1911
100F740	315:1 - 630:1						1641	1681	1846	1876
110F940	112:1 - 280:1						1666	1706	1846	1911
110F940	315:1 - 630:1									
120F1080	112:1 - 280:1								1846	1911
120F1080	315:1 - 630:1									

The motor adapters L-dimension are qualified with the E-series standard couplings.

Motor adapters for Bevel-Helical Gearboxes

F-series

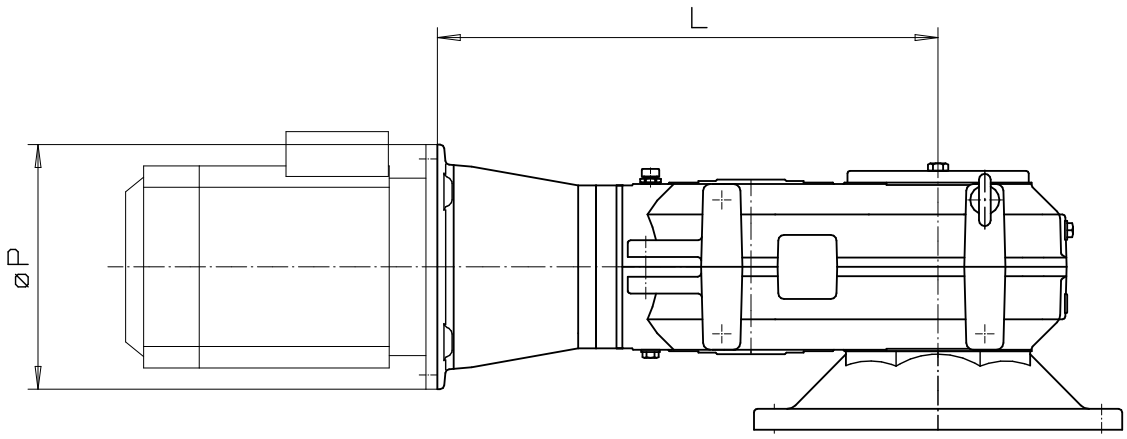

Motor IEC	P	i	L								
			Gearbox size								
			80	90	100	112	125	140	160	180	200
14F130	160	11,2:1 - 22,4:1	322								
		25:1 - 45:1	322								
		50:1 - 80:1	322								
		90:1 - 100:1	322								
19F165	200	11,2:1 - 22,4:1	332	362	412						
		25:1 - 45:1	332	362	412						
		50:1 - 80:1	332	362	412						
		90:1 - 100:1	332	362	412						
24F165	200	11,2:1 - 22,4:1	342	372	422	462	512				
		25:1 - 45:1	332	372	412	462	502				
		50:1 - 80:1	332	372	412	452	502				
		90:1 - 100:1	332	362	412	452	502				
28F215	250	11,2:1 - 22,4:1	352	382	432	472	522	592	642	704	
		25:1 - 45:1	352	382	432	472	522	592	642	704	
		50:1 - 80:1	352	382	432	472	522	592	642	704	
		90:1 - 100:1	352	382	432	472	522	592	642	704	
38F265	300	11,2:1 - 22,4:1		402	452	492	542	612	662	724	797
		25:1 - 45:1		402	442	492	532	612	662	724	797
		50:1 - 80:1		402	442	482	532	612	662	724	797
		90:1 - 100:1		392	442	482	532	612	662	724	797
42/48F300	350	11,2:1 - 22,4:1				522	572	642	692	754	827
		25:1 - 45:1				522	562	642	692	754	827
		50:1 - 80:1				512	562	642	692	754	827
		90:1 - 100:1				512	562	642	692	754	827
55F350	400	11,2:1 - 22,4:1							692	754	827
		25:1 - 45:1							692	754	827
		50:1 - 80:1							692	754	827
		90:1 - 100:1							692	754	827
60F400	450	11,2:1 - 22,4:1								784	857
		25:1 - 45:1								784	857
		50:1 - 80:1								784	857
		90:1 - 100:1								784	857

Average weights of gearboxes (kg)

F-series

Size	SF-2000	SF-3000	SF-4000	UF-3000
80	32	33		38
90	45	46		51
100	62	63		69
112	82	83		93
125	113	115	119	127
140	154	157	162	173
160	209	213	219	235
180	285	290	300	319
200	480	490	504	510

G-series

Size	SG-2000	SG-3000
225	580	610
250	810	840
280	1082	1110
315	1475	1490
355	2010	2050
400	2800	2860

E-series

Size	SE-2000	LE-2000	SE-3000	LE-3000	SE-4000	LE-4000
315	1630	1550	1660	1580	1700	1620
355	2100	1990	2140	2030	2190	2080
400	2860	2710	2920	2770	2980	2830
425	3230	3060	3300	3130	3370	3200
450	3770	3580	3850	3660	3930	3740
475	4640	4400	4730	4490	4830	4580
500	5390	5120	5500	5230	5610	5340
530	6220	5900	6350	6030	6480	6160
560			7840	7470	8000	7600
600			9600	9140	9800	9300
630			11970	11400	12200	11600
670			13930	13270	14200	13500
710			15900	15140	16200	15400
750			18170	17300	18500	17600
800			20750	19760	21100	20100
850			23600	22500	24000	22900
900			27000	25700	27400	26100

Additional weight for motor adapter and input coupling (kg)

SF-series

Size	Motor								
	14F130	19/24F165	28F215	38F265	42/48F300	55F350	60F400	65/75F500	80/90F600
80	2,5	3,5	7,0						
90		4,0	7,5	10,0					
100		5,0	8,5	11,0					
112		6,5	9,5	12,0	17,0				
125		7,5	10,5	13,0	17,5				
140			10,5	14,5	19,5				
160			11,0	16,0	21,0	23,5			
180			11,5	16,5	21,5	24,5	36,0		
200				17,0	22,0	25,0	37,5		

SG-series

Size	Motor								
	14F130	19/24F165	28F215	38F265	42/48F300	55F350	60F400	65/75F500	80/90F600
2225							88	97	127
2250							107	115	146
2280								175	252
2315								223	299
2355									374
2400									557
3225				45	53	60	60		
3250					74	80	80	85	
3280					72	75	81	87	
3315					89	93	97	105	135
3355						114	118	126	160
3400							133	135	218

E-series 315 - 530

Size	Motor							
	55F350	60F400	65/75F500	80F600	90F600	100F740	110F940	120F1080
3315	120	120	120	120				
3355		160	160	160	160			
3400				210	210	210		
3425				250	250	250		
3450				290	290	290		
3475				330	330	330		
3500				380	380	380	380	
3530				440	440	440	440	

E-series 3560 - 3900

Size	Motor							
	55F350	60F400	65/75F500	80F600	90F600	100F740	110F940	120F1080
3560				420	440	560	600	
3600				520	540	600	640	
3630						630	670	710
3670						780	820	860
3710						940	980	1020
3750						1120	1160	1200
3800						1380	1420	1460
3850						1670	1710	1750
3900						2000	2040	2080

E-series 4560 - 4900

Size	Motor							
	55F350	60F400	65/75F500	80F600	90F600	100F740	110F940	120F1080
4560	55	70	100	160	180	260		
4600	60	75	100	160	180	260		
4630		80	100	160	180	260		
4670		85	100	160	180	260		
4710			110	170	190	270		
4750			110	170	190	270	390	
4800			110	170	190	270	390	
4850			110	170	190	270	390	520
4900				170	190	270	390	520

Approximate quantities of oil (l)

SF-series

Size	SF
80	1.3
90	1.9
100	2.8
112	4.1
125	5.9
140	8.6
160	12.5
180	18.3
200	24.5

SG-series

Size	SG
225	40
250	60
280	80
315	100
355	170
400	260

SE/LE- series

Size	E-2000	E-3000/4000
315	40	35
355	50	45
400	65	60
425	85	80
450	105	100
475	120	110
500	140	130
530	160	150
560		240
600		310
630		350
670		430
710		530
750		590
800		760
850		910
900		1050

Recommended lubricants

Mineral oils DIN 51517-CLP, EP (extreme pressure) oil

ISO VG AGMA	150 4 EP	220 5 EP	320 6 EP	460 7 EP
ARAL	Degol BG 150 Plus	Degol BG 220 Plus	Degol BG 320 Plus	Degol BG 460 Plus
BP	Energol GR-XP 150	Energol GR-XP 220	EnergolGR-XP 320	Energol GR-XP 460
CASTROL	Optigear BM 150	Optigear BM 220	Optigear BM 320	Optigear BM 460
FUCHS	Renolin CLP 150	Renolin CLP 220	Renolin CLP 320	Renolin CLP 460
KLÜBER	Klüberoil GEM 1-150 N	Klüberoil GEM 1-220 N	Klüberoil GEM 1-320 N	Klüberoil GEM 1-460 N
LE	604 Almasol Vari-Purpose Gear Lub	607 Almasol Vari-Purpose Gear Lub	605 Almasol Vari-Purpose Gear Lub	608 Almasol Vari-Purpose Gear Lub
LUKOIL	Steelo 150	Steelo 220	Steelo 320	Steelo 460
MOBIL	Mobilgear 600 XP 150	Mobilgear 600 XP 220	Mobilgear 600 XP 320	Mobilgear 600 XP 460
NESTE	Vaihteisto 150 EP	Vaihteisto 220 EP	Vaihteisto 320 EP	Vaihteisto 460 EP
SHELL	Shell Omala S2 G 150	Shell Omala S2 G 220	Shell Omala S2 G 320	Shell Omala S2 G 460
TEBOIL	Pressure Oil 150	Pressure Oil 220	Pressure Oil 320	Pressure Oil 460
TEXACO	Meropa 150	Meropa 220	Meropa 320	Meropa 460
TOTAL	Carter XEP 150	Carter XEP 220	Carter XEP 320	Carter XEP 460
Q8 OILS	Q8 Goya NT 150	Q8 Goya NT 220	Q8 Goya NT 320	Q8 Goya NT 460

Synthetic oils DIN 51517-CLP, EP (extreme pressure) oil

ISO VG AGMA	150 4 EP	220 5 EP	320 6 EP	460 7 EP
BP	Enersyn HTX-150	Enersyn HTX-220	Enersyn HTX-320	Enersyn HTX-460
CASTROL	Optigear synth X 150	Optigear synth X 220	Optigear synth X 320	Optigear synth X 460
FUCHS	Renolin Unisyn CLP 150	Renolin Unisyn CLP 220	Renolin Unisyn CLP 320	Renolin Unisyn CLP 460
KLÜBER	Klübersynth GEM 4-150 N	Klübersynth GEM 4-220 N	Klübersynth GEM 4-320 N	Klübersynth GEM 4-460 N
NESTE	Vaihteisto S 150 EP	Vaihteisto S 220 EP	Vaihteisto S 320 EP	Vaihteisto S 460 EP
MOBIL	Mobil SHC Gear 150	Mobil SHC Gear 220	Mobil SHC Gear 320	Mobil SHC Gear 460
SHELL	Omala S4 GX 150	Omala S4 GX 220	Omala S4 GX 320	Omala S4 GX 460
TEBOIL	Sypres 150	Sypres 220	Sypres 320	Sypres 460
TOTAL	Carter SH 150	Carter SH 220	Carter SH 320	Carter SH 460

Greases

Lubricant greases	Grease lubricated gearboxes	Grease lubricated bearings
ARAL	Aralub FDP 0	Aralub HL2
BP	Energrease LS EP 0	Energrease LS EP 2
CASTROL	Longtime PD 0	Longtime PD 2
MOBIL	Mobilux EP 0	Mobilux EP 2
SHELL	Alvania Grease GC 00	Alvania Grease RL 2
TEBOIL	Universal CLS	Multipurpose EP

Location of oil plugs

SF-series

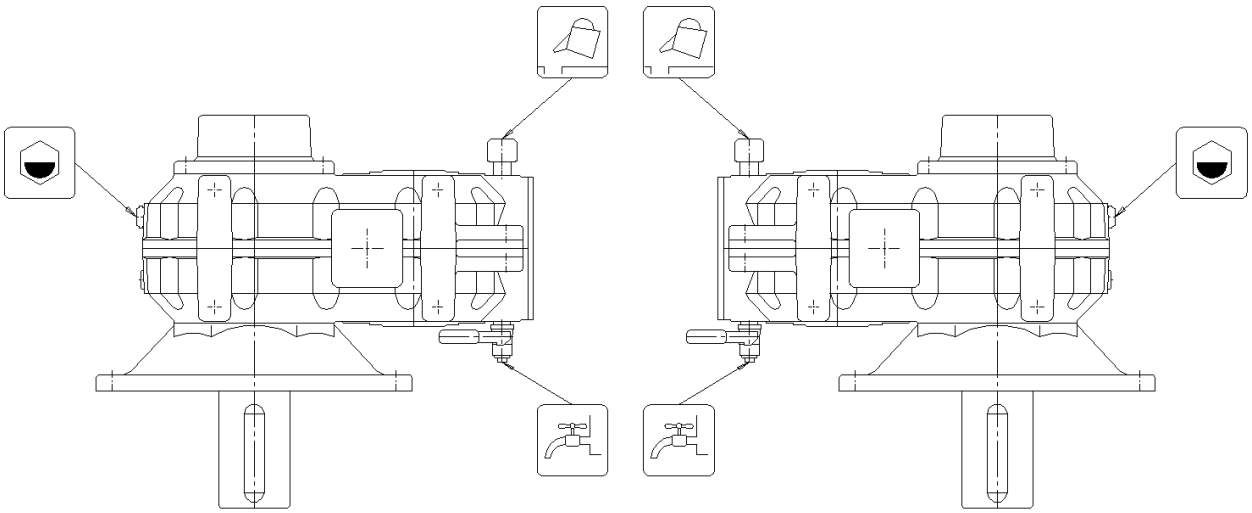

SG-series

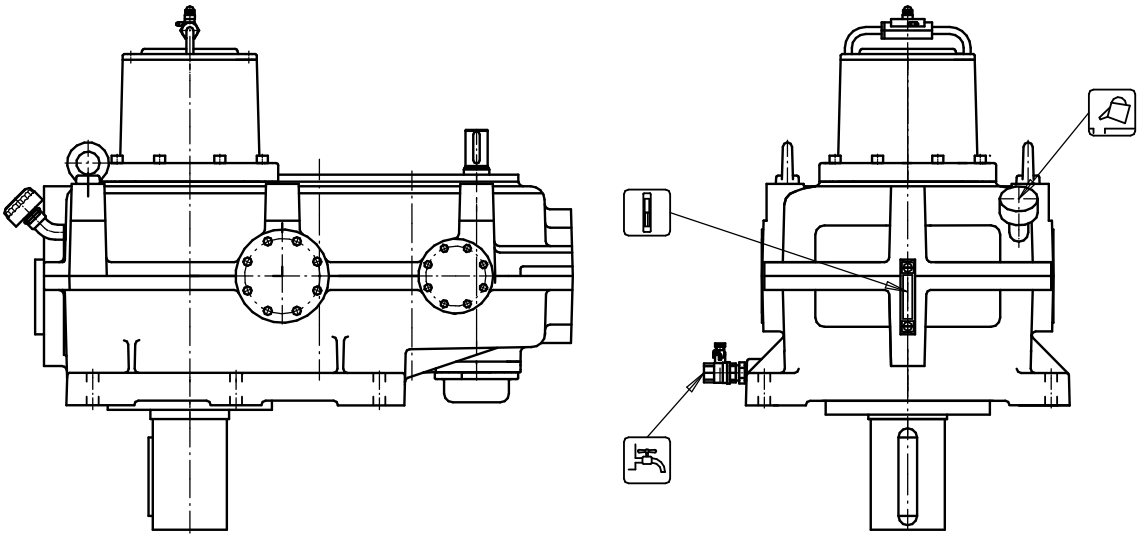

Oil fill

Oil level

Oil drain, equipped with a valve

Location of oil plugs

SE/LE-series 315-530

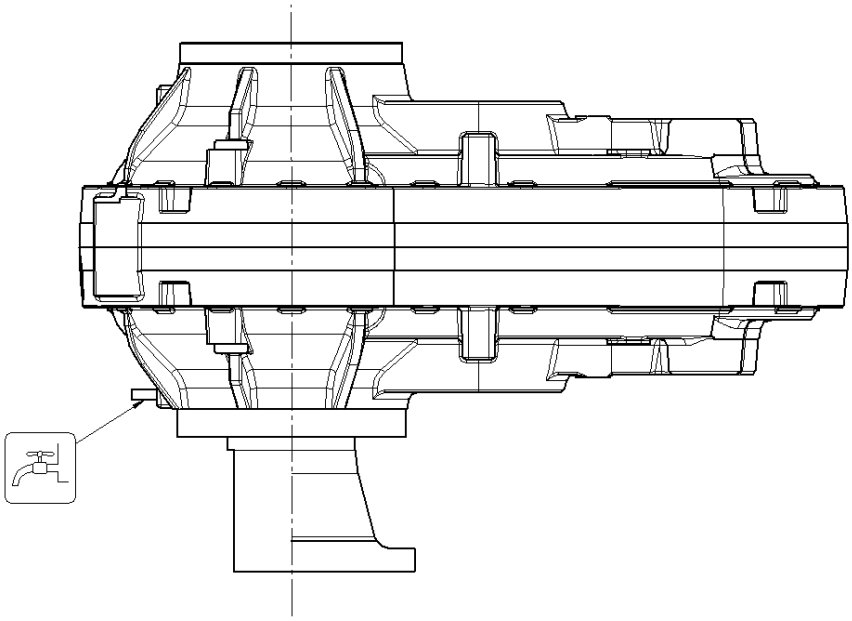

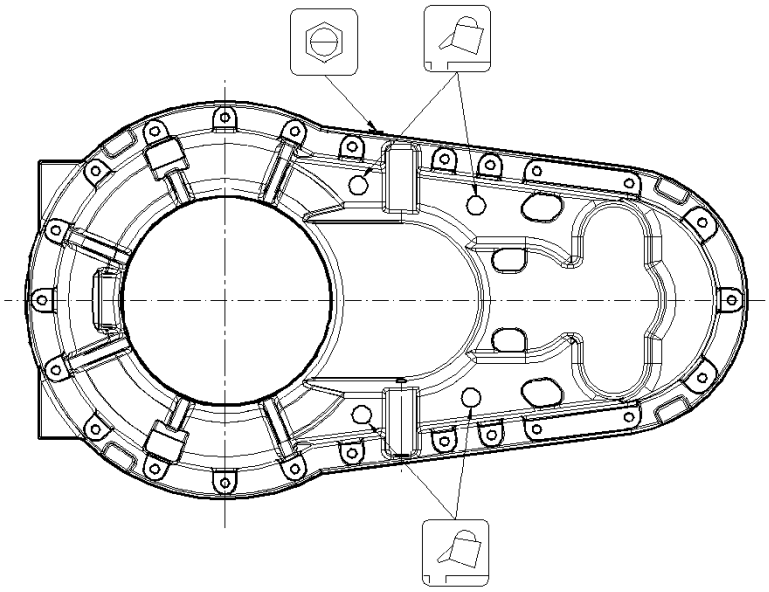

Oil fill

Oil level

Oil drain, equipped with valve

Location of oil plugs

SE/LE-series 560-900

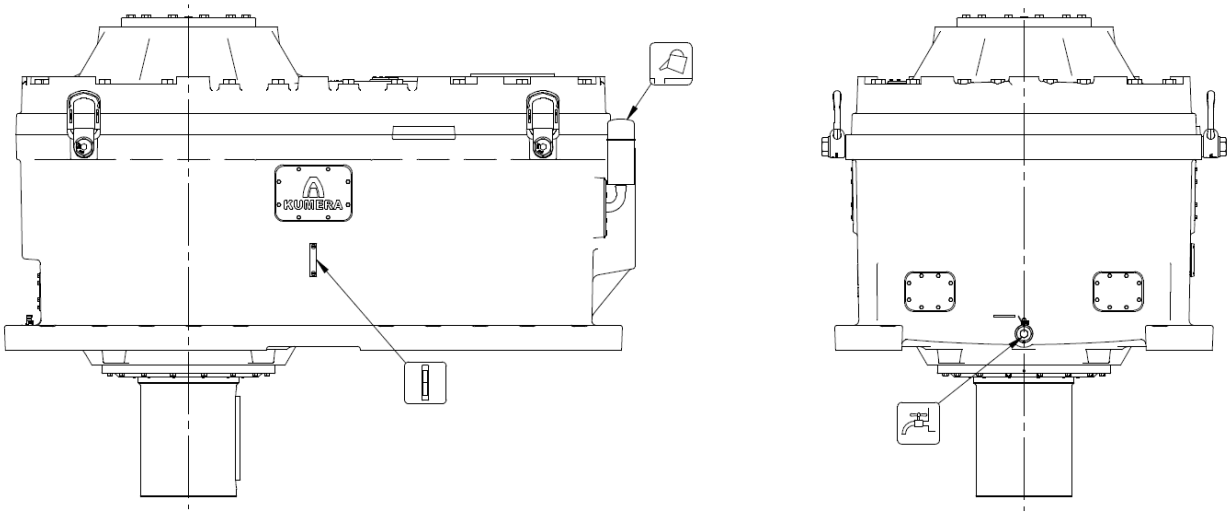

Oil fill

Oil level

Oil drain, equipped with valve

Customized products

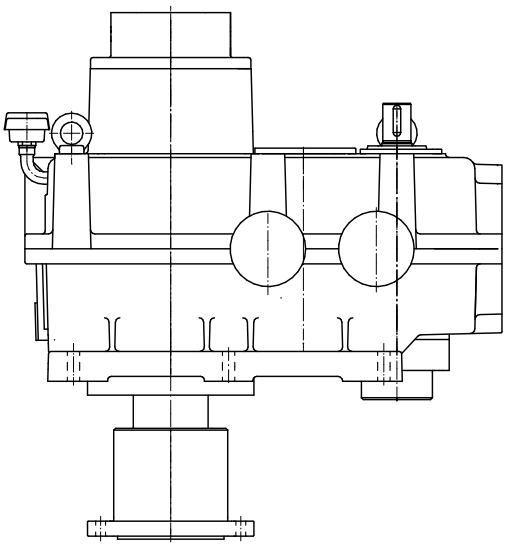

Flotation cell gearbox

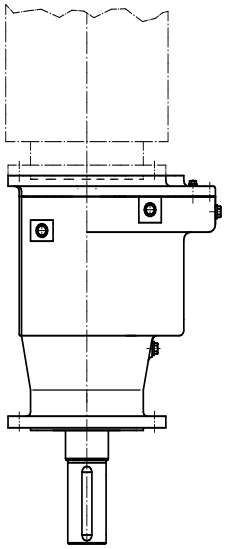

Submerged aeration gearbox

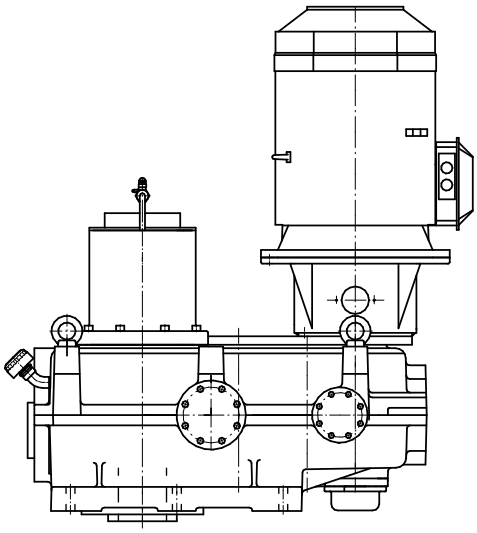

Helical agitator gearbox with a hollow shaft

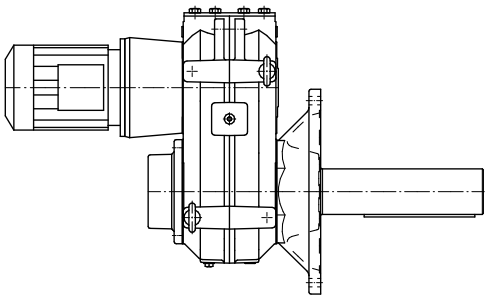

Chest agitator gearbox

Notes

Agitator gearboxes: E-Series

KUMERA POWER TRANSMISSION GROUP AND MARINE DIVISION www.kumera.com

KUMERA

KUMERA DRIVES OY
Kumerankatu 2
FI-11100 Riihimäki
FINLAND
Tel: +358 20 755 4200
E-mail: drives@kumera.com

KUMERA GETRIEBE GMBH
Bonner Straβe 38
D-53842 Troisdorf
GERMANY
Tel: +49 2241 988-0
Email: kumera.getriebe@kumera.com

KUMERA ANTRIEBSTECHNIK GMBH
Raiffeisenstrasse 38-40
A-8010 Graz
AUSTRIA
Tel: +43 316 471 524-0
E-mail: kumera.graz@kumera.com

KUMERA AS
P.O. Box 2043
N-3202 Sandefjord
NORWAY
Tel: +47 33 48 54 54
E-mail: sales@kumera.no

HELSETH AS
Baklivegen 11-13
N-6450 Hjelset
NORWAY
Tel: +47 71 202 900
Email: helseth@helseth.no

KUMERA (CHINA) CO, LTD.
168 Meifeng Road
Kunshan 215300, Jiangsu
CHINA
Tel: +86 512 503 61701
E-mail: kumerachina@kumera.com

K008 11/2022