KUMERA

Cumex® Gear Couplings

Cumex Gear Couplings

Gear Coupling Type KKA

Gear Coupling Type KKB

Gear Couplings
Construction and operating characteristics

CUMEX standard gear couplings have been designed for the usage in a wide range of industrial applications. High torque capacity and compact design are applicable for many installations where a robust and reliable operation is expected. The couplings compensate radial and angular misalignements as well as axial movements with weak restorative forces. CUMEX standard gear couplings are designed to compensate a max. angular missalignement of 1°. The development of a special gearing guarantees a high torque capacity as well as low backlash and a smooth operation. Standard types can be used in horizontal mounting position. The modular design leads to cost effective solutions and short lead time. Gear couplings are torsionally rigid but they require a backlash and therefore they are not free of clearance.

The basic type of the gear coupling consists of two hubs and two sleeves. The hubs are provided with special barrelled teeth and the sleeves have straight internal teeth. The sleeves are connected with screw joint and the outer end of the sleeve is provided with a groove to hold an O-ring seal. This O-ring seal prevents loss of lubricant, as well as contamination by dirt and dust.

The torque is transmitted from one shaft to the other by the gear teeth. A spherical gearing of the hubs allow an angular misalignement with weak restorative forces. Therefore couplings also effectively protect bearings and other elements of the connected machines.

Standard types KKA, KKB and KKS are designed to connect shafts with a minimum distance between the shaft ends. For higher shaft end distances the coupling types KKV and KKP are available. Thereby it is also possible to connect shafts with costomized shaft end distances. We can supply the length of the intermediate parts according the customer‘s specification.

The intermediate part of the KKP type is equipped with a tube shaft. This enables a light construction particularly for long shafts and big coupling types. The intermediate part of the KKV type is made as a solid shaft and therefore the diameter of the intermediate part is smaller.

When high rotation speed and/or long shafts are used, we advise to undertake vibration analyses and dynamic balancing of the drive train. Furthermore we instruct a dynamic balancing of the coupling. This approach shall prevent damages caused by resonaces or imbalance forces.

Table of content

Overview of standard coupling types 3
Examples of other types (types on request) 4

Selection of a coupling size 5
Tables for selecting the factors k1, k2, k3 6
Selection of the misalignment factor 7
Selection of shaft tolerances 8
Axial reaction forces 8

Gear Coupling type KKA 9
Gear Coupling type KKB 10
Gear Coupling type KKV 11
Gear Coupling type KKP 12
Gear Coupling type KKS 13

Installation 14
Tables for installation 15
Lubrication 16

Overview of standard coupling types

Type	Coupling size	Nominal torque [kNm]	Picture	Page
KKA	35 - 200	1,15 - 180	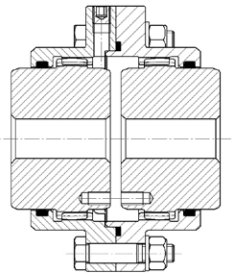	9
KKB	140 - 380	62 - 1.200	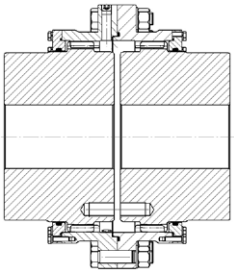	10
KKV	35 - 380	1,15 - 1.200	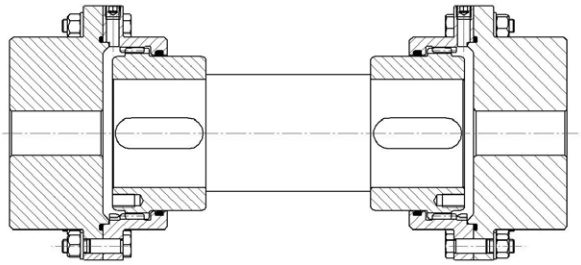	11
KKP	35 - 380	1,15 - 1.200	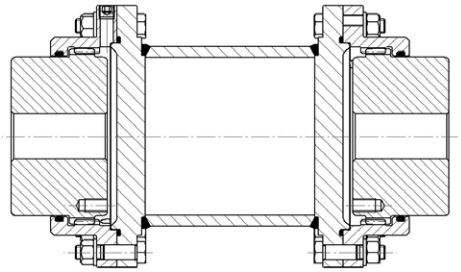	12
KKS	35 - 380	1,15 - 1.200	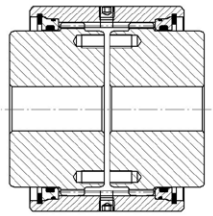 size 35 - 120 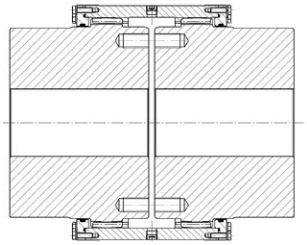 size 140 - 380	13

Examples of other types (types on request)

for vertical mounting position	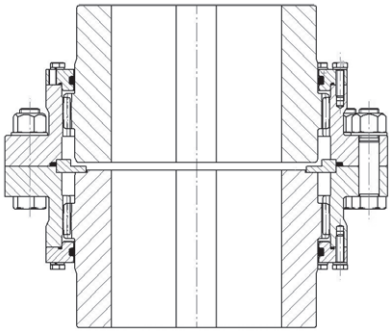	with special shaft connection	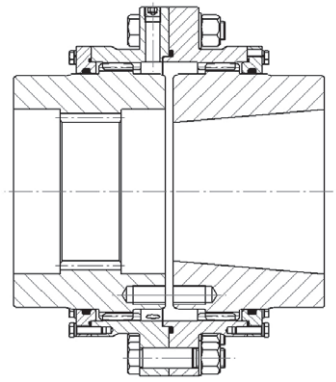
with axial limitation between the hubs	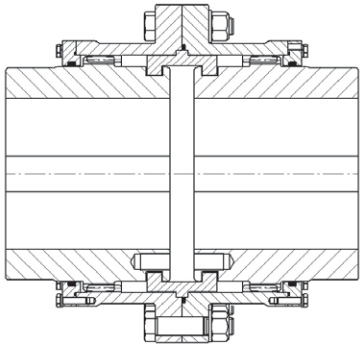	type KKS with intermediate shaft	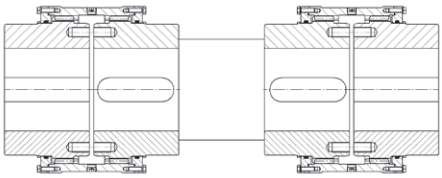
with brake disk	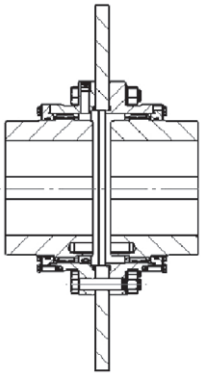	with special hub length	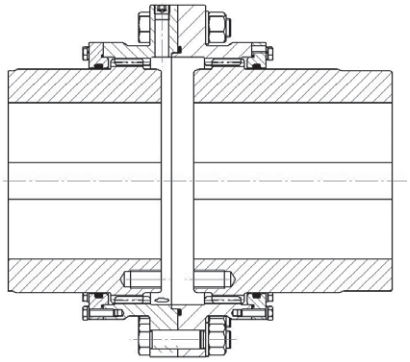
with drum brake	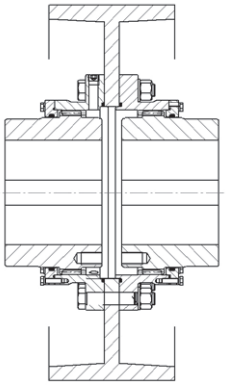	more axial movement	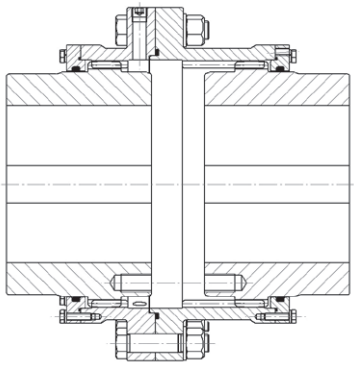

Selection of a coupling size

Cumex gear couplings are designed for a safe continous operation. For the selection of a coupling size following influencing parameters must be considered:

- input power and input torque
- input speed
- working condition, starting frequency, ambient temperature
- mounting and installation condition

The nominal torque given in the product tables is valid for an exactly uniform load torque and exactly alligned shafts. Depending on the application and the real shaft alignement during operation, suitable factors have to be considered for the determination of the required nominal coupling torque or the necessary coupling size. Load shocks and frequent starting activities will lead to higher load, while high speed, high ambient temperature and alignement errors are reducing the load capacity of the coupling. Additionally you have to check if the max. bore diameter of the coupling hub is suitable to the surrounding parts. If necessary, a bigger coupling than calculated in the torque calculation is required.

When selecting the coupling size, calculate the required coupling torque as following:

$$Tkn \geq \frac{T \times k1 \times k2 \times k3}{f_red}$$

$$T = \frac{9{,}55 \times P}{n}$$

Tkn	required coupling's nominal torque [kNm]
T	nominal input torque of the motor (drive) [kNm]
P	Nominal input power of the motor (drive) [kW]
n	nominal speed of the motor (drive) [1/min]
k1	load factor caused by driving and driven machine
k2	load factor caused by starting frequency
k3	service factor caused by amient temperature
f_red	misalignement factor
n max	maximum allowed coupling speed acc. product table

Tables for selecting the factors k1, k2, k3

	Load factor k1		
	Driving power sorce		
Driven machine	Electric motor, steam turbine	Multi cylinder engine, hydraulic and pneumatic motor	Single cylinder engine
Uniform load without overload, low operating frequency, no load shocks	1.0	1.25	1.5
Uniform load with light overload, continous loading, light load shocks	1.25	1.5	1.75
Uniform load with moderate overload, Continous loading, moderate load shocks	1.5	1.75	2.0
Heavy operation with moderate overload, continous loading and reversal load, heavy load shocks	1.75	2.0	2.5

Load factor k2				
10	20	40	80	startings in an hour
1.0	1.1	1.2	1.3	k2

Load factor k3			
30	50	>50	ambient temperature °C
1.0	1.1	1.3	k3

For extremely heavy operating conditions it might be necessary to select even higher load factors than mentioned above.

Selection of the misalignment factor

The misalignment factor is depending on the max. misalignment of the coupling during operation and the speed ratio between operating speed and max. speed of the coupling (n / n max.).

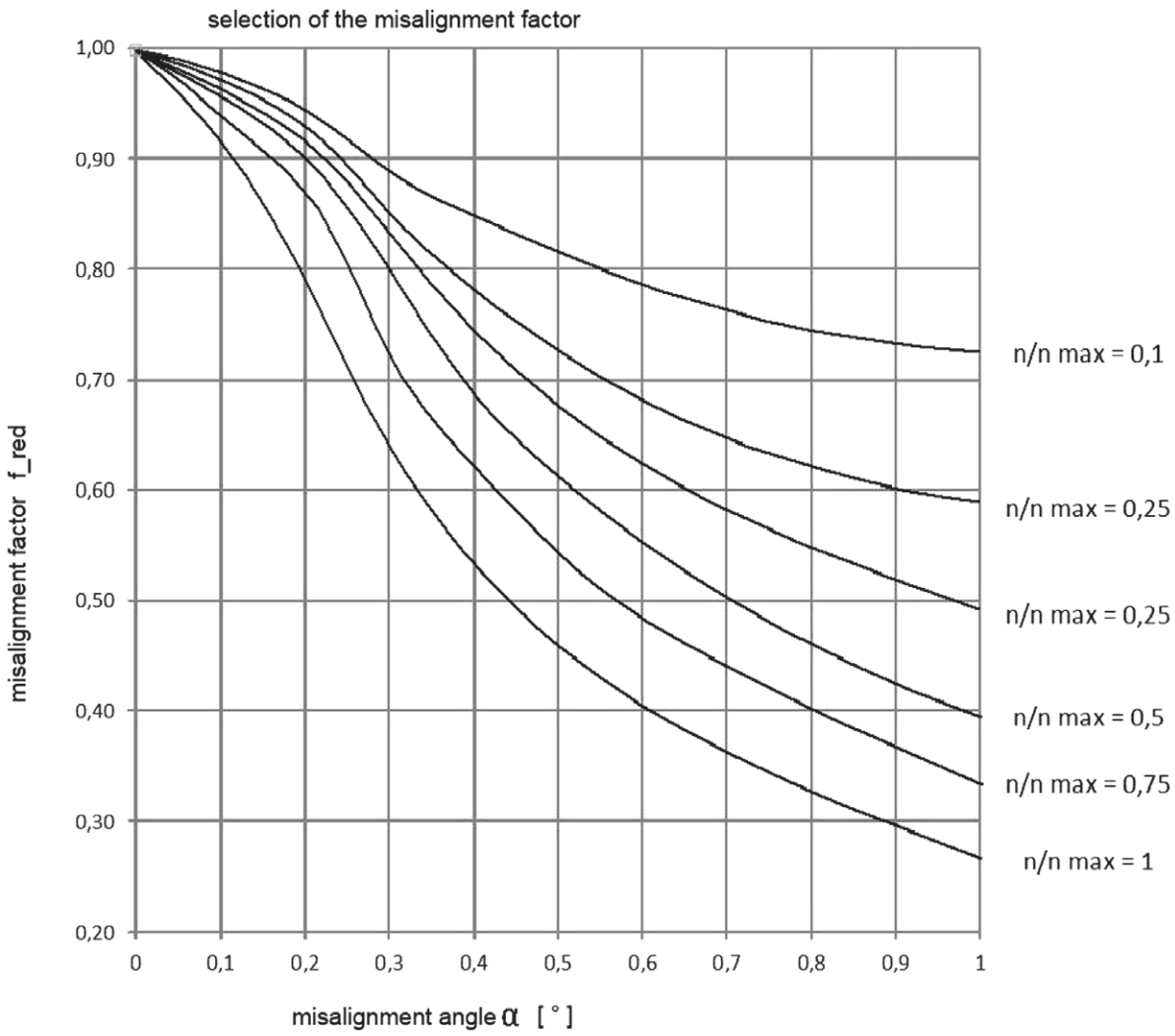

Selection of shaft tolerances

CUMEX gear couplings are designed for a max. interference fit of H7/r6 between machine shaft and coupling hub. For a stronger interference fit please contact us for clarification. An adjustment of the couplings internal tolerances might be necessary.

Axial reaction forces

CUMEX gear couplings compensate axial shaft movements through axial sliding between the gear teeth. Due to the friction between the gear teeth there will be axial forces in case of axial movements of the shafts. The surrounding shafts and their bearings must be designed to absorb this forces. The average gear friction coefficient is strongly depending on the operating conditions, the mounting conditions and the lubrication status of the coupling. Therefore the range of axial forces can be quite high. You can calculate the vaules according to the following formular:

$$F_ax = \frac{2000 \times Tn \times \mu m}{D4}$$

F_ax axial reaction force [N]

Tn nominal drive torque [Nm]

D4 outher diameter of hub acc. product table [mm]

µm average friction coefficient of gearing

Reference values for µm:

µm = 0,05 excellent lubrication conditions, small misalignment, no significant axial movements

µm = 0,14 normal lubrication conditions, moderate axial movements

µm = 0,3 worse lubrication conditions (nearly axial blocking), frequent and impact axial movements

Gear Coupling

Type KKA

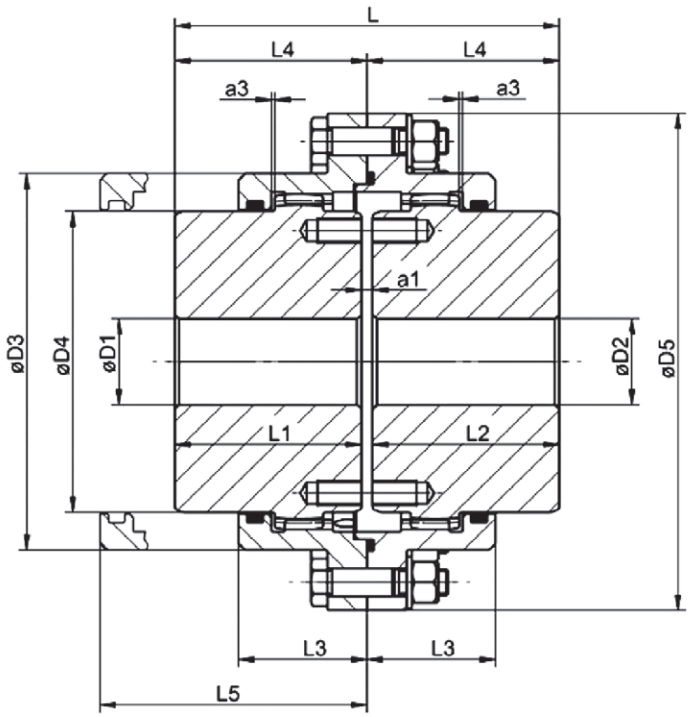

Size	Nominal Torque	Max. Torque	Max. Speed (7)	Bore diameter D1 / D2 (1) min.	max.	D3	D4	D5	L	L1 / L2	L3	L4	L5 (6)	a1	a3 (2)	Weight (3)	Moment of interia (4)	grease quantity	torsional rigidity (5)
	kNm	kNm	1/min	mm	mm	mm	mm	mm	mm	mm	mm	mm	mm	mm	mm	kg	kgm2	dm3	MNm/rad
35	1,15	2,3	9200	25	45	83	64	120,5	95	45	38,5	47,5	65	5	1,5	5	0,006	0,05	2,1
50	2,7	5,4	7700	25	62	115	86	152,5	115	55	44	57,5	80	5	1,5	9	0,02	0,1	6,5
65	6,5	12	6700	35	80	145	110	194	145	70	50	72,5	95	5	1,5	18	0,06	0,16	12,3
80	11,5	22	5150	45	110	175	140	231	175	85	58,5	87,5	115	5	1,5	31	0,15	0,23	20,5
100	22	42	4200	65	130	215	170	283	226	110	72	113	140	6	2	58	0,45	0,51	32
120	39	75	3600	85	160	260	210	328	266	130	84	133	170	6	2	96	0,99	0,7	64
140	62	120	3100	100	190	300	248	390	328	160	94	164	200	8	3	157	2,25	1,05	105
160	90,5	177	2700	110	215	344	280	434	370	180	102	185	220	10	3	223	3,93	1,75	125
180	135	250	2450	120	230	385	312	475	410	200	115	205	250	10	3	307	6,59	2,25	168
200	180	325	2200	130	260	430	352	518	490	240	134	245	290	10	3	451	11,38	2,9	185

(1) max. bore diameter is valid for couplings with keyway according DIN 6885/1
(2) axial clearance per coupling half, keep axial shaft deflection safely smaller
(3) valid for minimum bore diameter
(4) valid for minimum bore diameter
(5) aproximate value
(6) required space for sealing replacement
(7) dynamic balancig required

Gear Coupling

Type KKB

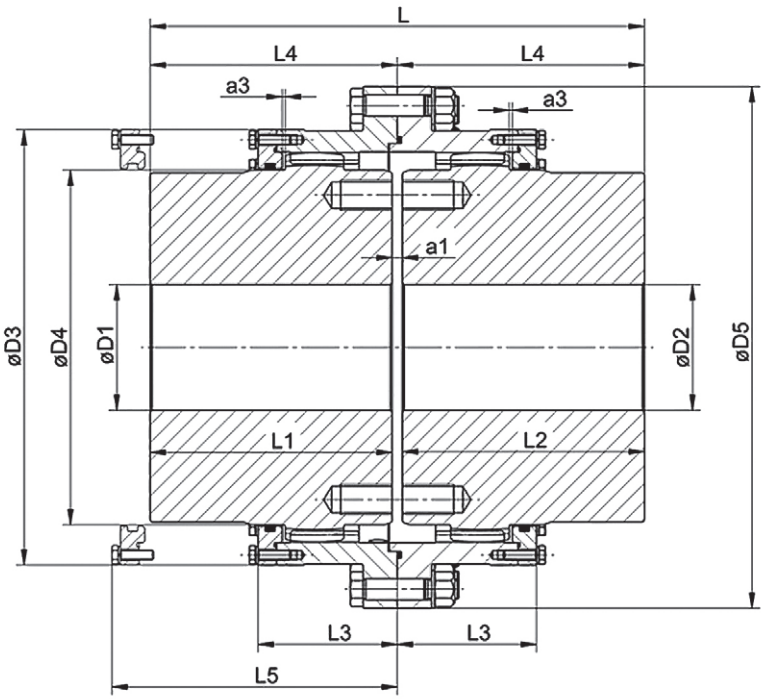

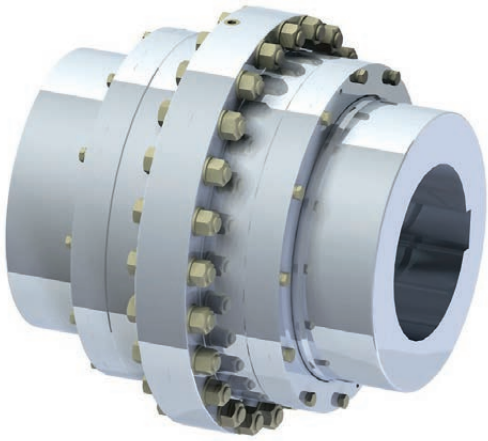

Size	Nominal Torque	Max. Torque	Max. Speed (7)	Bore diameter D1 / D2 (1) min.	max.	D3	D4	D5	L	L1 / L2	L3	L4	L5 (6)	a1	a3 (2)	Weight (3)	Moment of interia (4)	grease quantity	torsional rigidity (5)
	kNm	kNm	1/min	mm	mm	mm	mm	mm	mm	mm	mm	mm	mm	mm	mm	kg	kgm2	dm3	MNm/rad
140	62	120	3100	100	190	307	248	390	328	160	98	164	210	8	3	161	2,32	1,05	105
160	90,5	177	2700	110	215	351	280	434	370	180	106	185	235	10	3	228	4,06	1,75	125
180	135	250	2450	120	230	391	312	475	410	200	119	205	255	10	3	315	6,78	2,25	168
200	180	325	2200	130	260	432	352	518	490	240	138	245	300	10	3	453	11,6	2,9	185
220	220	405	2000	140	280	472	385	572	572	280	151	286	340	12	4	628	18,9	3,8	185
260	340	640	1750	170	330	553	450	652	632	310	167	316	380	12	4	924	37,9	6	220
280	480	880	1500	190	370	612	500	738	716	350	183	358	425	16	4	1290	65,5	7,5	490
320	710	1330	1350	260	450	712	592	838	836	410	211	418	490	16	4	1930	134,2	11,2	920
350	950	1750	1200	280	480	782	645	929	900	440	229	450	525	20	6	2555	218,5	14,9	1150
380	1200	2160	1100	310	520	842	702	989	980	480	257	490	570	20	6	3205	315,9	19,5	1410

(1) max. bore diameter is valid for couplings with keyway according DIN 6885/1
(2) axial clearance per coupling half, keep axial shaft deflection safely smaller
(3) valid for minimum bore diameter
(4) valid for minimum bore diameter
(5) aproximate value
(6) required space for sealing replacement
(7) dynamic balancig required

Gear Coupling

type KKV

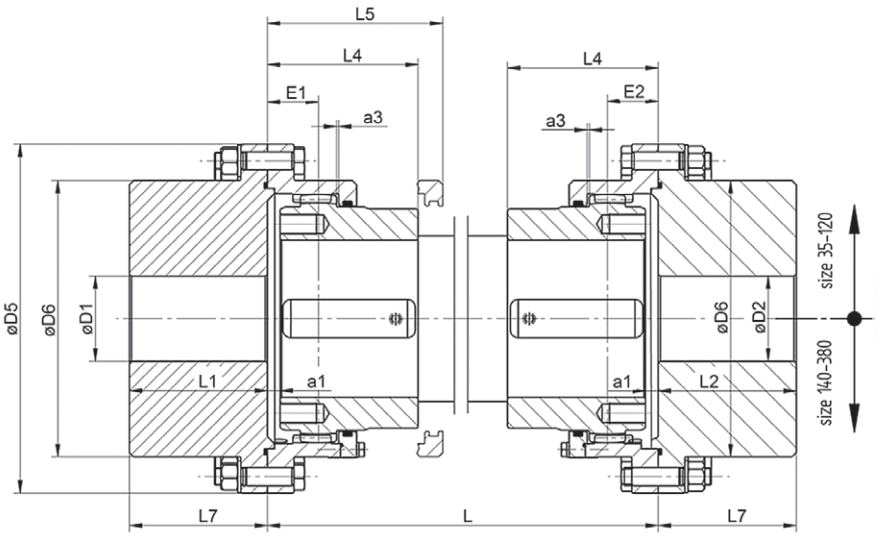

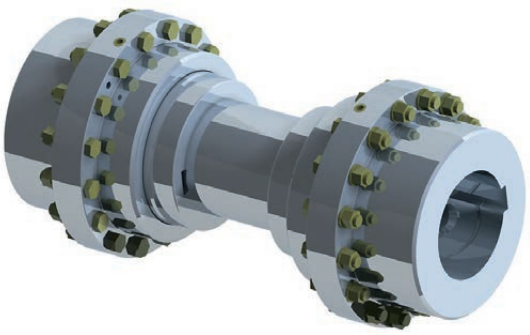

Size	Nominal Torque	Max. Torque	Max. Speed (7)	Bore diameter D1 / D2 (1) min.	max.	D5	L min.	L1 / L2	L4	L5 (6)	L7	D6	E1 / E2	a1	a3 (2)	Weight (3)	Moment of interia (4)	grease quantity (8)	torsional rigidity (5)
	kNm	kNm	1/min	mm	mm	mm	mm	mm	mm	mm	mm	mm	mm	mm	mm	kg	kgm2	dm3	MNm/rad
35	1,15	2,3	9200	25	45	121	150	45	52,5	72	45	83	20	7,5	1,5	11	0,014	0,035	
50	2,7	5,4	7700	25	62	153	190	55	62,5	90	55	115	23	7,5	1,5	22	0,045	0,06	
65	6,5	12	6700	35	80	194	230	70	78,5	110	70	145	27,5	8,5	1,5	43	0,13	0,09	
80	11,5	22	5150	45	110	231	270	85	93,5	125	85	175	31	8,5	1,5	75	0,34	0,13	
100	22	42	4200	65	130	283	320	110	120	150	110	215	41	10	2	145	1,02	0,28	
120	39	75	3600	85	160	328	370	130	141	175	130	260	48	11	2	240	2,3	0,39	
140	62	120	3100	100	190	390	450	160	172	210	160	300	56	12	3	390	5,22	0,57	
160	90,5	177	2700	110	215	434	490	180	193	235	180	344	60	13	3	552	9,3	0,92	
180	135	250	2450	120	230	475	530	200	215	255	200	385	67	15	3	760	15,6	1,2	
200	180	325	2200	130	260	518	630	240	255	300	240	430	82	15	3	1115	27,1	1,55	
220	220	405	2000	140	280	572	710	280	300	340	280	470	91	20	4	1530	44,9	2,05	
260	340	640	1750	170	330	652	800	310	330	380	310	550	96	20	4	2260	89,7	3,15	
280	480	880	1500	190	370	738	900	350	375	430	350	610	108	25	4	3110	155,5	3,75	
320	710	1330	1350	260	450	838	1020	410	435	490	410	710	131	25	4	4790	319,7	6,4	
350	950	1750	1200	280	480	929	1080	440	465	520	440	780	140	25	6	6270	516	8,3	
380	1200	2160	1100	310	520	989	1160	480	505	560	480	840	160	25	6	7850	756	10,7	

(1) max. bore diameter is valid for couplings with keyway according DIN 6885/1
(2) axial clearance per coupling half, keep axial shaft deflection safely smaller
(3) valid for minimum bore diameter and shortest intermediate shaft
(4) valid for minimum bore diameter and shortest intermediate shaft
(5) we can provide the information on request
(6) required space for sealing replacement
(7) dynamic balancig required
(8) volume per coupling side

Gear Coupling

type KKP

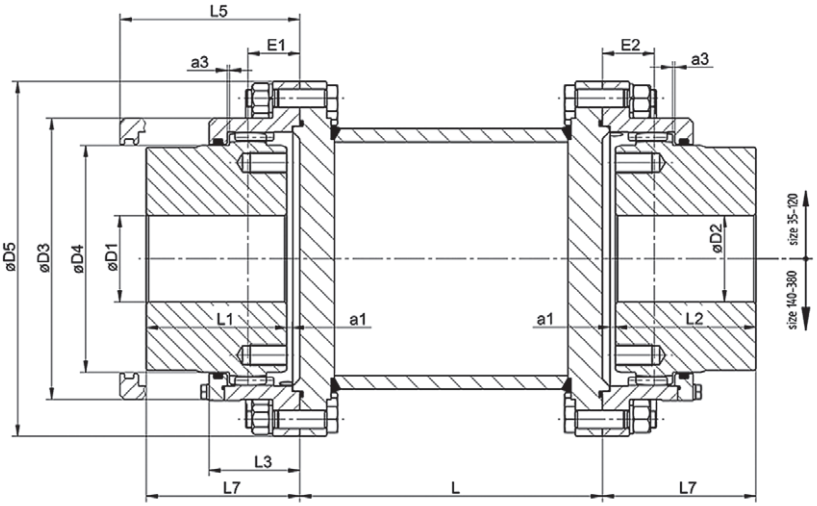

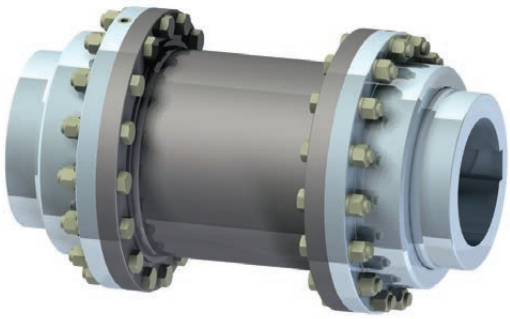

Size	Nominal Torque	Max. Torque	Max. Speed (7)	Bore diameter D1 / D2 (1) min.	max.	D5	L min.	L1 / L2	D4	L5 (6)	L7	D3	E1 / E2	a1	a3 (2)	Weight (3)	Moment of interia (4)	grease quantity (8)	torsional rigidity (5)
	kNm	kNm	1/min	mm	mm	mm	mm	mm	mm	mm	mm	mm	mm	mm	mm	kg	kgm2	dm3	MNm/rad
35	1,15	2,3	9200	25	45	121	120	45	64	72	52,5	83	20	2,5	1,5	8,5	0,012	0,035	
50	2,7	5,4	7700	25	62	153	120	55	86	90	62,5	115	23	2,5	1,5	16	0,039	0,06	
65	6,5	12	6700	35	80	194	120	70	110	110	78,5	145	27,5	2,5	1,5	28	0,11	0,09	
80	11,5	22	5150	45	110	231	120	85	140	125	93,5	175	31	2,5	1,5	49	0,26	0,13	
100	22	42	4200	65	130	283	160	110	170	150	120	215	41	4	2	96	0,78	0,28	
120	39	75	3600	85	160	328	160	130	210	175	141	260	48	4	2	150	1,7	0,39	
140	62	120	3100	100	190	390	190	160	248	210	172	307	56	7	3	248	3,9	0,57	
160	90,5	177	2700	110	215	434	190	180	280	235	193	351	60	5	3	335	6,6	0,92	
180	135	250	2450	120	230	475	210	200	312	255	215	391	67	7	3	455	10,85	1,2	
200	180	325	2200	130	260	518	210	240	352	300	255	432	82	6	3	650	17,6	1,55	
220	220	405	2000	140	280	572	240	280	385	340	300	472	91	11	4	860	28,3	2,05	
260	340	640	1750	170	330	652	260	310	450	380	330	553	96	10	4	1240	55,5	3,15	
280	480	880	1500	190	370	738	300	350	500	430	375	612	108	15	4	1740	96,8	3,75	
320	710	1330	1350	260	450	838	300	410	592	490	435	712	131	15	4	2585	187	6,4	
350	950	1750	1200	280	480	929	400	440	645	520	465	782	140	13	6	3510	319	8,3	
380	1200	2160	1100	310	520	989	400	480	702	560	505	842	160	13	6	4310	446	10,7	

(1) max. bore diameter is valid for couplings with keyway according DIN 6885/1
(2) axial clearance per coupling half, keep axial shaft deflection safely smaller
(3) valid for minimum bore diameter and shortest intermediate shaft
(4) valid for minimum bore diameter and shortest intermediate shaft
(5) we can provide the information on request
(6) required space for sealing replacement
(7) dynamic balancig required
(8) volume for one coupling side

Gear Coupling

type KKS

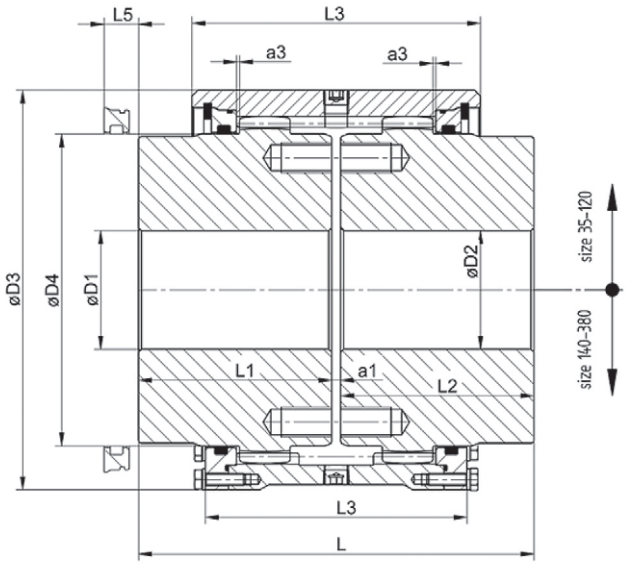

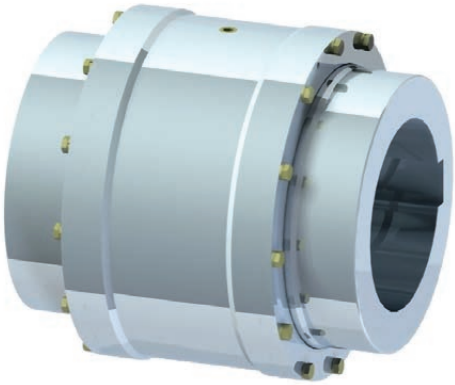

Size	Nominal Torque	Max. Torque	Max. Speed (7)	Bore diameter D1 / D2 (1) min.	max.	D3	L	L1 / L2	L3	L5 (6)	D4	a1	a3 (2)	Weight (3)	Moment of interia (4)	grease quantity	torsional rigidity (5)
	kNm	kNm	1/min	mm	mm	mm	mm	mm	mm	mm	mm	mm	mm	kg	kgm2	dm3	MNm/rad
35	1,15	2,3	9200	25	45	98	95	45	78	38	64	5	1,5	4,5	0,005	0,021	2
50	2,7	5,4	7700	25	62	128	115	55	93	45	86	5	1,5	9,6	0,02	0,055	4,5
65	6,5	12	6700	35	80	152	145	70	100	40	110	5	1,5	16	0,04	0,075	10
80	11,5	22	5150	45	110	184	175	85	118	45	140	5	1,5	28,5	0,12	0,12	17
100	22	42	4200	65	130	228	226	110	140	45	170	6	2	52,7	0,33	0,25	28
120	39	75	3600	85	160	269	266	130	162	40	210	6	2	86,5	0,77	0,33	52
140	62	120	3100	100	190	307	328	160	196	70	248	8	3	135	1,53	1,05	92
160	90,5	177	2700	110	215	351	370	180	212	55	280	10	3	197	2,9	1,75	115
180	135	250	2450	120	230	391	410	200	238	60	312	10	3	277	5,05	2,25	140
200	180	325	2200	130	260	432	490	240	276	70	352	10	3	414	9,28	2,9	180
220	220	405	2000	140	280	472	572	280	302	80	385	12	4	568	14,98	3,8	220
260	340	640	1750	170	330	553	632	310	334	80	450	12	4	855	31,2	6	340
280	480	880	1500	190	370	612	716	350	366	70	500	16	4	1180	52,7	7,5	410
320	710	1330	1350	260	450	712	836	410	422	70	592	16	4	1800	114	11,2	800
350	950	1750	1200	280	480	782	900	440	458	80	645	20	6	2330	177	14,9	1020
380	1200	2160	1100	310	520	842	980	480	514	110	702	20	6	2960	265	19,5	1300

(1) max. bore diameter is valid for couplings with keyway according DIN 6885/1
(2) axial clearance per coupling half, keep axial shaft deflection safely smaller
(3) valid for minimum bore diameter and shortest intermediate shaft
(4) valid for minimum bore diameter and shortest intermediate shaft
(5) we can provide the information on request
(6) required space for sealing replacement and hub alignment
(7) dynamic balancig required

Installation

A careful installation of your CUMEX gear coupling will have a positive influence on its lifetime. CUMEX gear couplings shall only be installed from educated and experienced professionals.

1. Preparation works:

1.1. Shut down all related machines and secure them against unintended start up.

1.2. Clean all coupling parts.

1.3. Clean all related shaft ends and assemble feather keys.

1.4. Lubricate the shaft ends with grease.

2. Assembling the coupling

2.1. Lubricate the gear teeth of coupling halfs or sleeves with grease.

2.2. Lubricate the sealing rings with grease and assemble them in the coupling halfs, sleeves and caps.

2.3. Put the coupling housings or sleeves over the shaft ends. Please be careful and prevent damage of the sealings.

2.4. Heat the coupling halfs according to correct assembly, please consider actual interference for correct temperature. Use oil bath or suitable inductive heating device for the warm up. Do not use a burner or any other flame for heating.

2.5. Apply the keyways of the hub with suitable sealing compound.

2.6. Assemble the coupling hubs on the shaft ends. Take care that you have a suitable device available to pull up the coupling halfs (hydraulic or screw device). Lock the hubs against axial movement. Do not bring unallowed forces to the shaft ends to prevent bearing damages. Don‘t act with hammer blow on the shafts and coupling parts.

2.7. Align both shafts. Please consider the distance a1 as good as possible. The misalignment of the shafts must be within the given tolerance (see table on next page). A misalignment near the upper border of the tolerance is only allowed if the speed of the coupling is low. Otherwise take care of a better alignment with max. values of 1/3 of the given tolerances. Please consider also that the shafts may move during operation. Check the alignment of the shafts with a laser device and print a certificate of the alignment.

2.8. Let the hubs cool down totally and assemble the outher parts of the coupling. Take care that there is no damaging of the sealings. Splitting surfaces without O-Rings are to be applied with elastic sealing compount.

2.9. Mount fasteners, screws and nuts uniformly with the recommended fastening torque. The usage of torque wrench is obligated. We recommend to use Loctite 243 for locking the screw threads. Please see the table below for the correct fastening torque.

2.10. Check the coupling regarding backlash and axial movement of the coupling halfs or sleeve.

2.11. Fill the coupling with lubricant (perform instructions of chapter „Lubrication“).

Thread size	Fastening torque
M 10	48 Nm
M 12	84 Nm
M 16	206 Nm
M 20	366 Nm
M 24	600 Nm

Tables for installation

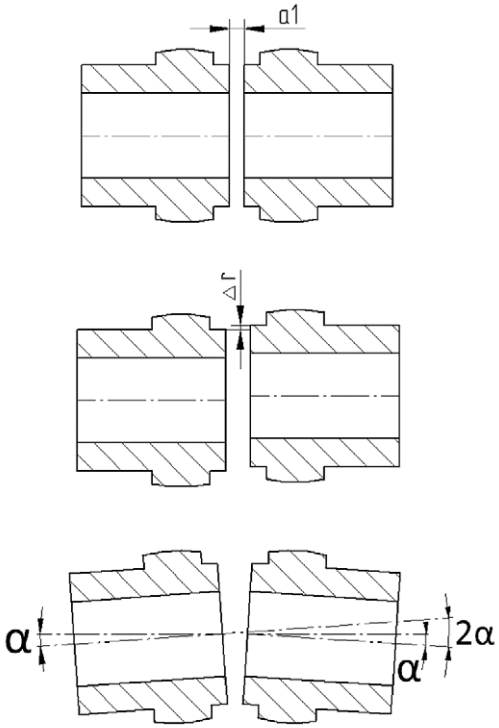

Misalignment (explanation)

Maximum allowed deviations coupling types KKA, KKB			
size	max. axial displacement [mm] (2)	max. radial displacement [mm] (1)	max. angular deviation [°]
35	± 1	0,70	1
50	± 1	0,80	1
65	± 1	0,96	1
80	± 1	1,08	1
100	± 1,5	1,43	1
120	± 1,5	1,68	1
140	± 2,5	1,95	1
160	± 2,5	2,48	1
180	± 2,5	2,78	1
200	± 2,5	2,86	1
220	± 3,5	3,18	1
260	± 3,5	3,35	1
280	± 3,5	3,77	1
320	± 3,5	4,57	1
350	± 5	4,89	1
380	± 5	5,59	1

(1) based on max. deviation of 1°, please consider torque limiting for such high deviation
(2) value for each coupling hub

Maximum allowed deviations coupling types KKS			
size	max. axial displacement [mm] (2)	max. radial displacement [mm] (1)	max. angular deviation [°]
35	± 1	0,49	1
50	± 1	0,56	1
65	± 1	0,65	1
80	± 1	0,77	1
100	± 1,5	0,94	1
120	± 1,5	1,41	1
140	± 2,5	1,95	1
160	± 2,5	2,48	1
180	± 2,5	2,78	1
200	± 2,5	2,86	1
220	± 3,5	3,18	1
260	± 3,5	3,35	1
280	± 3,5	3,77	1
320	± 3,5	4,57	1
350	± 5	4,89	1
380	± 5	5,59	1

(1) based on max. deviation of 1°, please consider torque limiting for such high deviation
(2) value for each coupling hub

Maximum allowed deviations coupling types KKV, KKP			
size	max. axial displacement [mm] (2)	max. radial displacement [mm] (1)	max. angular deviation [°]
35	± 1	depending on the length of the intermediate shaft	1
50	± 1		1
65	± 1		1
80	± 1		1
100	± 1,5		1
120	± 1,5		1
140	± 2,5		1
160	± 2,5		1
180	± 2,5		1
200	± 2,5		1
220	± 3,5		1
260	± 3,5		1
280	± 3,5		1
320	± 3,5		1
350	± 5		1
380	± 5		1

(2) value for each coupling hub

Lubrication

Gear couplings are delivered from factory without lubricant. Couplings must be lubricated before use with semi-fluid lubricant according to recommendation enclosed.

1. Filling of lubricant

Open the filling and inspection plugs. Bring the coupling in the position mentioned below. The lubricant is poured through the filling hole until lubricant comes out from the inspection hole. The approximate amount of lubricant is given in the product table in this catalogue. The filling with lubricant shall be made when the temperature of the coupling is > 15 °C and with semi-fluid lubricant temperature > 20 °C.

2. Recommended lubricants

Company:	Quality of lubricant:
BP	Energrease LS-EP 00
Gulf	Gulfcrown Grease EP 0
Mobil	Mobilgrease XTC
Shell	Alvania grease EPI
Texaco	Grease Multifak EP 0

3. Change of lubricant

The lubricant should be changed after every 8000 operating hours. Change the lubricant while the coupling is in operating temperature. We recommend to clean the gear coupling with cleaning oil with low viscosity. For an easy lubricant filling we recommend to warm up the new lubricant. Plug the filling holes with the plug screws. Therefore put also sealing compound on the thread of the plug screws.

In connection with the change of lubricant the coupling always should be checked for enough backlash and an easy possibility to move the sleeve in axial direction. If there is no backlash or the sleeve is not moveable, check that the misalignment has not changed and that the teeth are not damaged.

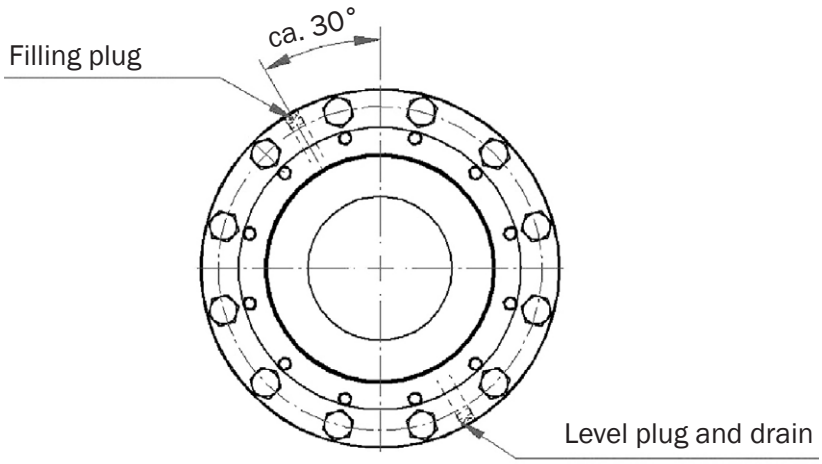

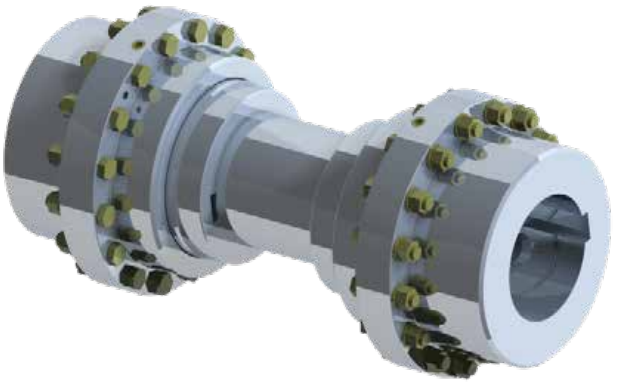

Gear Coupling type KKV

Gear Coupling type KKP

Gear Coupling type KKS

KUMERA POWER TRANSMISSION GROUP AND MARINE DIVISION www.kumera.com

KUMERA

KUMERA DRIVES OY
Kumerankatu 2
FI-11100 Riihimäki
FINLAND
Tel: +358 20 755 4200
E-mail: drives@kumera.com

KUMERA GETRIEBE GMBH
Bonner Straβe 38
D-53842 Troisdorf
GERMANY
Tel: +49 2241 988-0
Email: kumera.getriebe@kumera.com

KUMERA ANTRIEBSTECHNIK GMBH
Raiffeisenstrasse 38-40
A-8010 Graz
AUSTRIA
Tel: +43 316 471 524-0
E-mail: kumera.graz@kumera.com

KUMERA AS
P.O. Box 2043
N-3202 Sandefjord
NORWAY
Tel: +47 33 48 54 54
E-mail: sales@kumera.no

HELSETH AS
Baklivegen 11-13
N-6450 Hjelset
NORWAY
Tel: +47 71 202 900
Email: helseth@helseth.no

KUMERA (CHINA) CO, LTD.
168 Meifeng Road
Kunshan 215300, Jiangsu
CHINA
Tel: +86 512 503 61701
E-mail: kumerachina@kumera.com

K023 6/2020