KUMERA

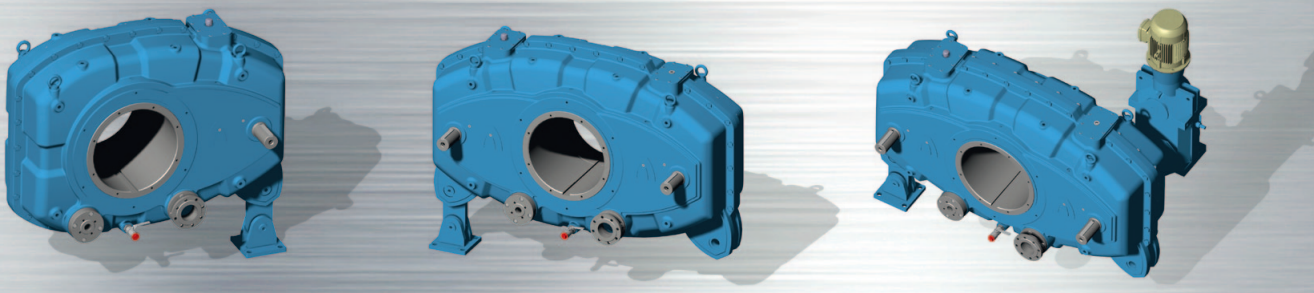

Yankee Cylinder Gearboxes

Yankee Cylinder Gearboxes

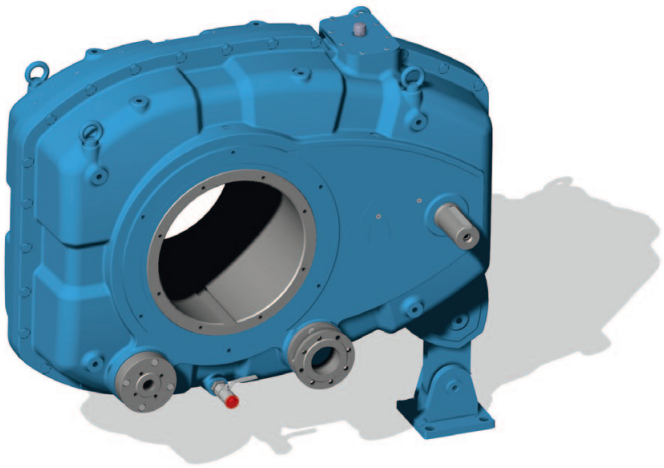

Single input shaft

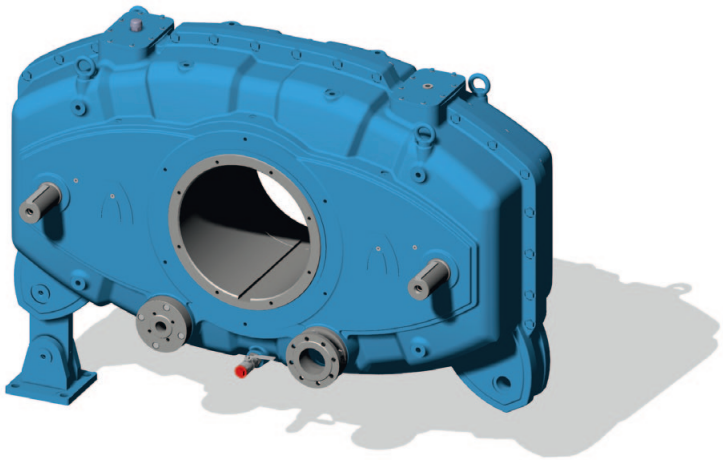

Dual input shafts

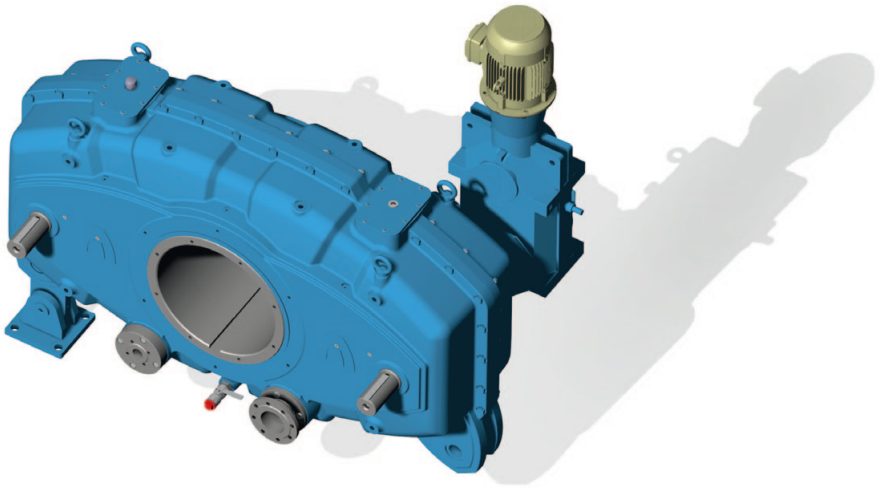

Dual input shafts with auxiliary drive

Kumera Power Transmissions Group is a division of Kumera Corporation. The manufacturing plants are located in Austria, Finland, Norway and China.

Beside this catalogue Kumera Power Transmissions Group offers Power Plaza internet service to select optimum gearbox for various applications, and related information such as drawings in 2 and 3D format, delivery time and price for acknowledged customers. The Power Plaza includes also spare parts ordering service by submitting Bill of Material and Assembly drawing, where the user can pick up appropriate spare parts based on the code (serial number) or order number. Maintenance Manuals are also available for use to our Customers.

Our sales staff all over the world are trained to consult our customers in designing the most optimum drive solutions for various needs of selected industries. Their contact information is available at our websites **www.kumera.com**.

The Kumera Service network covers worldwide main markets in pulp and paper and chemical industries, site of large shipyards and mining activities.

The Service Hotline is open 24 hours a day in seven days a week (24/7). Telephone number is available at our website www.kumera.com.

This catalogue presents Yankee Cylinder gearboxes.

Other Cumera-gearboxes, such as Cumpact- and Cumera-helical gearboxes, helical-bevel gearboxes and bevel gearboxes in A, F, G, D and LX series, Agitator-drives, Cumera-E-series and tailor-made drives for pulp and paper industry, steel mills, crane drives, geared couplings are introduced in separate catalogues.

Kindly request these catalogues from our sales staff if you need them in paper copies, otherwise all Kumera products can be seen on our webpages www.kumera.com or printed from there.

www.kumera.com

Table of content

Presentation of gearboxes, types and their characteristics.....3
Type Marking System 4

Selection table for Helical Gearboxes YZ1-2000 series 5
Selection table for Helical Gearboxes YZ1-3000 series 7
Selection table for Helical Gearboxes YZ2-2000 series 9
Selection table for Helical Gearboxes YZ2-3000 series 11
Exact Ratios for Helical Gearboxes YZ-series 13

Dimension Drawing YZ1-series ratio i = 9.0 - 50 14
Dimension Drawing YZ2-series ratio i = 9.0 - 50 15
Hollow shaft diameter.....16
Average Weights of Gearboxes 16
Sunday Drive.....17
Gearboxes for tissue machines.....18
Special gearboxes for tissue machines.....18

Presentation of gearboxes, types and their characteristics

Optimized design for tissue-making processes

The Yankee gear unit series is built on the proven foundation of Kumera's design and manufacturing system, combining decades of extensive experience with trusted quality. These simple and efficient gear units provide high reliability and life expectancy for the toughest tissue-making processes.

Simple mechanical design

Using the latest engineering and design methods, the Yankee gear unit series offers high efficiency in a lightweight and compact solution, with a comprehensive range of single and dual input shaft designs. Integrated labyrinth seals ensure leak-free operation, allowing the Kumera Yankee gear unit series to be maintenance friendly.

Integrated fail-safe lubrication system

The Yankee series from Kumera is built with a backup oil reserve, allowing for limited continued operation in case of central oil system failure. Combined with an increased bearing lifetime, Kumera Yankee gear units ensure that your processes operate reliably and for their full life expectancy.

Minimal oil required for operation

Understanding the needs for reducing environmental and process costs, the integrated lubrication system in the Yankee gear unit series has been designed to provide the optimum amount of oil for complete tooth and bearing coverage.Through advanced engineering design methods, the Yankee gear unit housing and tooth profiles are optimized to minimize noise and vibration.

Specifications

Input speed range	up to 2500 rpm
Power capacity	up to 2 x 4550 kW (2 x 6100 hp)
Nominal output torque	up to 424 000 Nm
Lubrication options	Connection to external lubrication system, pressure lubrication
Housing material	Casted grey iron
Housing design	Symmetrical housing split along vertical
Hollow shaft design	Keyway, shrink disk, and custom solution
Bearing lifetime	100 000+ hours
Axial forces from steam head	up to 100 kN

Every care has been taken to ensure the correctness of the information contained on this catalogue but no liability can be accepted for any errors or omissions. We reserve the right to make changes in the interest of technical progress.

Type Marking System

Y	Z	2	S	2	560	-	16	-	R	-	540	Z	-	E1
Yankee cylinder drive	Gearbox series	Number of input shafts, 1 or 2	S = helical	Number of reduction stages, 2 or 3	Gearbox size	Separator	Nominal ratio	Separator	Shaft arrangement, L or R	Separator	Hollow shaft diameter	K = central lubrication, Z = lubrication unit	Separator	Code for special arrangement

Single input shaft

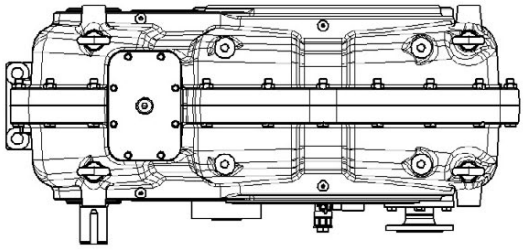

Shaft arrangement L

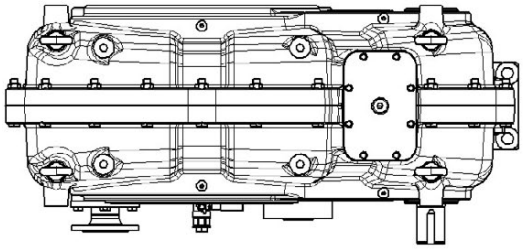

Shaft arrangement R

Dual input shaft

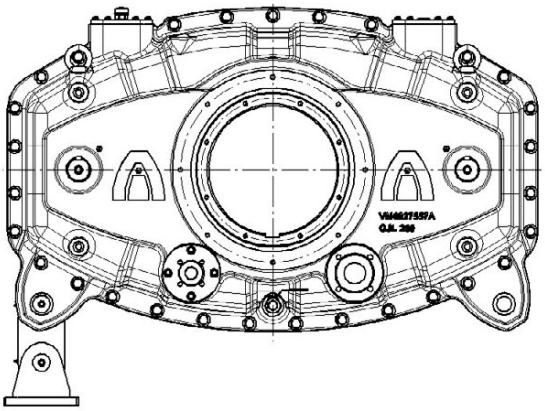

Shaft arrangement L

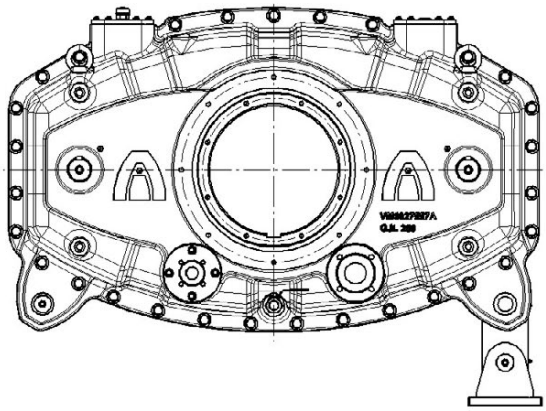

Shaft arrangement R

Selection table for Helical Gearboxes YZ1-2000 series

i	n_1	2355	2400	2450	2500	2530	2560	2600	2630
		P_{1N}	P_{1N}	P_{1N}	P_{1N}	P_{1N}	P_{1N}	P_{1N}	P_{1N}
	1/min	kW	kW	kW	kW	kW	kW	kW	kW
9:1	1800	770	1150	1550	2200	2700	3100	3950	4550
	1500	660	950	1300	1850	2300	2600	3250	3800
	1000	440	640	880	1250	1550	1750	2150	2550
10:1	1800	710	1050	1400	1900	2450	2700	3500	4100
	1500	590	860	1200	1600	2050	2300	2900	3400
	1000	390	580	800	1050	1350	1550	1900	2300
11.2:1	1800	640	920	1300	1750	2200	2450	3100	3700
	1500	530	770	1100	1450	1850	2050	2600	3100
	1000	350	510	710	940	1200	1350	1700	2050
12.5:1	1800	570	820	1150	1550	1950	2200	2800	3300
	1500	470	690	950	1300	1650	1850	2350	2750
	1000	310	460	630	840	1100	1250	1550	1850
14:1	1800	510	730	1050	1400	1750	1950	2500	2950
	1500	420	610	860	1150	1450	1650	2050	2500
	1000	280	400	570	740	940	1100	1350	1650
16:1	1800	450	670	930	1250	1550	1750	2150	2650
	1500	370	550	780	1050	1300	1450	1750	2200
	1000	245	370	520	680	830	940	1150	1450
18:1	1800	400	570	830	1100	1400	1550	1900	2400
	1500	330	470	690	900	1150	1300	1600	2000
	1000	215	310	460	600	740	850	1050	1300

P_{1N} = Gearbox nominal power rating

Selection table for Helical Gearboxes YZ1-2000 series

i	n_1	2355	2400	2450	2500	2530	2560	2600	2630
		K_{SF}	K_{SF}	K_{SF}	K_{SF}	K_{SF}	K_{SF}	K_{SF}	K_{SF}
	1/min								
9:1	1800	2.28	2.27	2.27	2.10	2.28	2.22	2.21	2.20
	1500	2.25	2.24	2.28	2.04	2.28	2.15	2.12	2.13
	1000	2.06	2.09	2.15	1.88	2.10	2.01	1.94	1.99
10:1	1800	2.28	2.27	2.28	2.05	2.28	2.17	2.16	2.16
	1500	2.20	2.20	2.26	1.98	2.23	2.10	2.07	2.10
	1000	2.05	2.05	2.11	1.81	2.04	1.95	1.89	1.96
11.2:1	1800	2.23	2.23	2.28	2.02	2.27	2.13	2.10	2.12
	1500	2.14	2.16	2.22	1.94	2.18	2.06	2.02	2.06
	1000	2.07	2.02	2.07	1.77	1.99	1.91	1.84	1.91
12.5:1	1800	2.17	2.19	2.25	1.97	2.21	2.09	2.05	2.08
	1500	2.09	2.12	2.18	1.89	2.12	2.03	1.97	2.02
	1000	2.10	2.03	2.05	1.74	1.94	1.86	1.80	1.86
14:1	1800	2.12	2.14	2.20	1.92	2.16	2.05	2.00	2.04
	1500	2.04	2.07	2.13	1.84	2.07	1.98	1.92	1.98
	1000	2.12	2.06	2.04	1.72	1.92	1.83	1.76	1.81
16:1	1800	2.07	2.11	2.17	1.89	2.10	2.01	1.93	2.01
	1500	2.06	2.04	2.10	1.81	2.02	1.93	1.85	1.94
	1000	2.14	2.08	2.06	1.71	1.90	1.81	1.73	1.79
18:1	1800	2.04	2.04	2.13	1.83	2.05	1.96	1.89	1.97
	1500	2.08	2.02	2.07	1.76	1.96	1.88	1.81	1.89
	1000	2.15	2.10	2.08	1.69	1.88	1.79	1.71	1.77

Minimum selection factor K_{SF} to achieve bearing lifetime L_{10mh} >100000 h

Selection table for Helical Gearboxes YZ1-2000 series

i	n_1	2355	2400	2450	2500	2530	2560	2600	2630
		T_{2N}	T_{2N}	T_{2N}	T_{2N}	T_{2N}	T_{2N}	T_{2N}	T_{2N}
	1/min	kNm	kNm	kNm	kNm	kNm	kNm	kNm	kNm
9:1	1800	37	52	71	102	122	142	180	210
	1500	38	53	73	102	126	142	178	211
	1000	37	53	75	101	125	143	176	212
10:1	1800	38	53	72	102	124	142	179	210
	1500	38	53	74	102	126	143	178	211
	1000	37	53	75	101	124	143	175	212
11.2:1	1800	38	53	74	102	127	143	178	211
	1500	37	53	74	102	126	143	177	211
	1000	37	53	74	100	124	143	174	211
12.5:1	1800	38	53	74	102	126	143	177	211
	1500	37	53	74	101	125	143	176	212
	1000	37	53	74	100	123	142	174	211
14:1	1800	37	53	74	101	125	143	177	211
	1500	37	53	75	101	125	143	175	212
	1000	37	53	74	99	123	142	173	210
16:1	1800	37	53	74	101	125	143	176	212
	1500	37	53	75	101	124	143	174	212
	1000	37	53	74	99	122	141	172	209
18:1	1800	37	53	75	101	124	143	175	212
	1500	37	53	74	100	124	142	174	211
	1000	37	52	73	99	122	140	171	208

T_{2N} = Gearbox nominal torque rating

Selection table for Helical Gearboxes YZ1-3000 series

i	n_1	3355	3400	3450	3500	3530	3560	3600	3630
		P_{1N}	P_{1N}	P_{1N}	P_{1N}	P_{1N}	P_{1N}	P_{1N}	P_{1N}
	1/min	kW	kW	kW	kW	kW	kW	kW	kW
20:1	1800	320	490	690	930	1200	1400	1650	1950
	1500	270	410	580	770	990	1150	1400	1600
	1000	180	270	390	510	650	750	920	1100
22.4:1	1800	320	470	660	840	1100	1250	1500	1850
	1500	260	390	540	700	880	1050	1250	1550
	1000	175	260	360	460	580	670	820	990
25:1	1800	280	420	580	750	940	1100	1350	1650
	1500	235	350	480	620	780	910	1150	1350
	1000	155	230	320	410	520	600	740	880
28:1	1800	250	370	520	660	840	970	1200	1450
	1500	210	310	430	550	700	810	990	1200
	1000	140	205	285	360	460	530	650	790
31.5:1	1800	225	340	480	610	740	860	1050	1300
	1500	185	280	390	510	620	710	850	1100
	1000	125	185	260	340	410	470	560	700
35.5:1	1800	200	295	420	550	660	770	910	1200
	1500	165	245	350	450	550	640	760	960
	1000	110	160	230	300	360	420	500	630
40:1	1800	180	265	380	490	610	690	820	1050
	1500	150	220	310	410	510	570	680	860
	1000	98	145	205	270	340	380	450	570
45:1	1800	160	235	340	440	530	610	730	920
	1500	135	195	280	360	440	510	610	760
	1000	88	130	185	240	290	340	400	500
50:1	1800	140	210	290	390	470	540	650	820
	1500	115	175	240	330	390	450	540	680
	1000	75	115	160	215	260	295	360	450

P_{1N} = Gearbox nominal power rating

Selection table for Helical Gearboxes YZ1-3000 series

i	n_1	3355	3400	3450	3500	3530	3560	3600	3630
		K_{SF}	K_{SF}	K_{SF}	K_{SF}	K_{SF}	K_{SF}	K_{SF}	K_{SF}
	1/min								
20:1	1800	2.27	1.94	2.00	2.23	2.27	2.22	2.27	2.24
	1500	2.19	1.88	1.94	2.14	2.23	2.14	2.23	2.19
	1000	2.05	1.88	1.93	1.96	2.04	1.96	2.08	2.05
22.4:1	1800	2.23	2.02	1.95	2.02	2.07	1.99	2.10	2.14
	1500	2.14	1.96	1.94	1.95	1.99	1.92	2.02	2.06
	1000	2.08	2.02	2.01	1.79	1.82	1.76	1.85	1.88
25:1	1800	2.02	1.96	1.93	1.81	1.83	1.78	1.99	1.90
	1500	2.04	1.98	1.97	1.75	1.79	1.73	1.91	1.83
	1000	2.08	2.03	2.03	1.67	1.79	1.69	1.75	1.67
28:1	1800	2.04	1.97	1.96	1.76	1.80	1.74	1.87	1.85
	1500	2.06	2.00	1.99	1.70	1.77	1.71	1.80	1.78
	1000	2.10	2.04	2.04	1.68	1.80	1.70	1.65	1.63
31.5:1	1800	2.06	1.99	1.97	1.70	1.78	1.72	1.87	1.74
	1500	2.07	2.01	2.00	1.64	1.76	1.69	1.80	1.68
	1000	2.10	2.05	2.05	1.69	1.82	1.72	1.65	1.63
35.5:1	1800	2.07	2.01	1.99	1.67	1.76	1.71	1.83	1.71
	1500	2.08	2.03	2.02	1.66	1.78	1.68	1.76	1.65
	1000	2.10	2.05	2.06	1.69	1.83	1.73	1.61	1.64
40:1	1800	2.08	2.02	2.01	1.65	1.77	1.69	1.79	1.67
	1500	2.09	2.04	2.03	1.67	1.79	1.69	1.72	1.63
	1000	2.09	2.05	2.06	1.70	1.83	1.73	1.62	1.65
45:1	1800	2.09	2.03	2.03	1.66	1.79	1.69	1.75	1.64
	1500	2.10	2.04	2.04	1.68	1.81	1.71	1.68	1.62
	1000	2.09	2.05	2.06	1.71	1.84	1.74	1.63	1.66
50:1	1800	2.10	2.04	2.04	1.67	1.80	1.70	1.71	1.62
	1500	2.10	2.05	2.05	1.69	1.82	1.72	1.64	1.63
	1000	2.08	2.05	2.06	1.71	1.84	1.74	1.63	1.66

Minimum selection factor K_{SF} to achieve bearing lifetime L_{10mh} >100000 h

Selection table for Helical Gearboxes YZ1-3000 series

i	n_1	3355	3400	3450	3500	3530	3560	3600	3630
		T_{2N}	T_{2N}	T_{2N}	T_{2N}	T_{2N}	T_{2N}	T_{2N}	T_{2N}
	1/min	kNm	kNm	kNm	kNm	kNm	kNm	kNm	kNm
20:1	1800	34	50	70	100	121	143	168	198
	1500	34	50	70	100	123	142	170	200
	1000	34	49	71	98	122	140	170	202
22.4:1	1800	37	53	74	100	123	142	174	210
	1500	37	53	74	99	123	141	172	210
	1000	36	52	73	98	121	139	170	206
25:1	1800	37	53	74	99	123	142	174	210
	1500	37	53	74	99	122	141	172	208
	1000	36	52	73	98	121	139	170	206
28:1	1800	37	53	74	99	122	141	172	210
	1500	36	52	73	99	122	140	172	208
	1000	36	52	73	98	120	139	170	206
31.5:1	1800	37	53	73	99	122	140	172	208
	1500	36	52	73	98	121	140	170	208
	1000	36	52	72	97	120	138	168	204
35.5:1	1800	36	52	73	99	122	140	172	208
	1500	36	52	73	98	121	139	170	206
	1000	36	52	72	97	120	138	168	204
40:1	1800	36	52	73	98	121	140	170	208
	1500	36	52	73	98	121	139	170	206
	1000	36	51	72	97	119	137	168	204
45:1	1800	36	52	73	98	121	139	170	206
	1500	36	52	72	98	120	138	168	206
	1000	36	51	72	97	119	137	168	204
50:1	1800	36	52	73	98	120	139	170	206
	1500	36	52	72	97	120	138	168	204
	1000	36	51	72	96	119	137	166	202

T_{2N} = Gearbox nominal torque rating

Selection table for Helical Gearboxes YZ2-2000 series

i	n_1	2355	2400	2450	2500	2530	2560	2600	2630
		P_{1N}	P_{1N}	P_{1N}	P_{1N}	P_{1N}	P_{1N}	P_{1N}	P_{1N}
	1/min	kW	kW	kW	kW	kW	kW	kW	kW
9:1	1800	2 x 770	2 x 1150	2 x 1550	2 x 2200	2 x 2700	2 x 3100	2 x 3950	2 x 4550
	1500	2 x 660	2 x 950	2 x 1300	2 x 1850	2 x 2300	2 x 2600	2 x 3250	2 x 3800
	1000	2 x 440	2 x 640	2 x 880	2 x 1250	2 x 1550	2 x 1750	2 x 2150	2 x 2550
10:1	1800	2 x 710	2 x 1050	2 x 1400	2 x 1900	2 x 2450	2 x 2700	2 x 3500	2 x 4100
	1500	2 x 590	2 x 860	2 x 1200	2 x 1600	2 x 2050	2 x 2300	2 x 2900	2 x 3400
	1000	2 x 390	2 x 580	2 x 800	2 x 1050	2 x 1350	2 x 1550	2 x 1900	2 x 2300
11.2:1	1800	2 x 640	2 x 920	2 x 1300	2 x 1750	2 x 2200	2 x 2450	2 x 3100	2 x 3700
	1500	2 x 530	2 x 770	2 x 1100	2 x 1450	2 x 1850	2 x 2050	2 x 2600	2 x 3100
	1000	2 x 350	2 x 510	2 x 710	2 x 940	2 x 1200	2 x 1350	2 x 1700	2 x 2050
12.5:1	1800	2 x 570	2 x 820	2 x 1150	2 x 1550	2 x 1950	2 x 2200	2 x 2800	2 x 3300
	1500	2 x 470	2 x 690	2 x 950	2 x 1300	2 x 1650	2 x 1850	2 x 2350	2 x 2750
	1000	2 x 310	2 x 460	2 x 630	2 x 840	2 x 1100	2 x 1250	2 x 1550	2 x 1850
14:1	1800	2 x 510	2 x 730	2 x 1050	2 x 1400	2 x 1750	2 x 1950	2 x 2500	2 x 2950
	1500	2 x 420	2 x 610	2 x 860	2 x 1150	2 x 1450	2 x 1650	2 x 2050	2 x 2500
	1000	2 x 280	2 x 400	2 x 570	2 x 740	2 x 940	2 x 1100	2 x 1350	2 x 1650
16:1	1800	2 x 450	2 x 670	2 x 930	2 x 1250	2 x 1550	2 x 1750	2 x 2150	2 x 2650
	1500	2 x 370	2 x 550	2 x 780	2 x 1050	2 x 1300	2 x 1450	2 x 1750	2 x 2200
	1000	2 x 245	2 x 370	2 x 520	2 x 680	2 x 830	2 x 940	2 x 1150	2 x 1450
18:1	1800	2 x 400	2 x 570	2 x 830	2 x 1100	2 x 1400	2 x 1550	2 x 1900	2 x 2400
	1500	2 x 330	2 x 470	2 x 690	2 x 900	2 x 1150	2 x 1300	2 x 1600	2 x 2000
	1000	2 x 215	2 x 310	2 x 460	2 x 600	2 x 740	2 x 850	2 x 1050	2 x 1300

P_{1N} = Gearbox nominal power rating

Selection table for Helical Gearboxes YZ2-2000 series

i	n_1	2355	2400	2450	2500	2530	2560	2600	2630
		K_{SF}	K_{SF}	K_{SF}	K_{SF}	K_{SF}	K_{SF}	K_{SF}	K_{SF}
	1/min								
9:1	1800	2.28	2.27	2.27	2.10	2.28	2.22	2.21	2.20
	1500	2.25	2.24	2.28	2.04	2.28	2.15	2.12	2.13
	1000	2.06	2.09	2.15	1.88	2.10	2.01	1.94	1.99
10:1	1800	2.28	2.27	2.28	2.05	2.28	2.17	2.16	2.16
	1500	2.20	2.20	2.26	1.98	2.23	2.10	2.07	2.10
	1000	2.05	2.05	2.11	1.81	2.04	1.95	1.89	1.96
11.2:1	1800	2.23	2.23	2.28	2.02	2.27	2.13	2.10	2.12
	1500	2.14	2.16	2.22	1.94	2.18	2.06	2.02	2.06
	1000	2.07	2.02	2.07	1.77	1.99	1.91	1.84	1.91
12.5:1	1800	2.17	2.19	2.25	1.97	2.21	2.09	2.05	2.08
	1500	2.09	2.12	2.18	1.89	2.12	2.03	1.97	2.02
	1000	2.10	2.03	2.05	1.74	1.94	1.86	1.80	1.86
14:1	1800	2.12	2.14	2.20	1.92	2.16	2.05	2.00	2.04
	1500	2.04	2.07	2.13	1.84	2.07	1.98	1.92	1.98
	1000	2.12	2.06	2.04	1.72	1.92	1.83	1.76	1.81
16:1	1800	2.07	2.11	2.17	1.89	2.10	2.01	1.93	2.01
	1500	2.06	2.04	2.10	1.81	2.02	1.93	1.85	1.94
	1000	2.14	2.08	2.06	1.71	1.90	1.81	1.73	1.79
18:1	1800	2.04	2.04	2.13	1.83	2.05	1.96	1.89	1.97
	1500	2.08	2.02	2.07	1.76	1.96	1.88	1.81	1.89
	1000	2.15	2.10	2.08	1.69	1.88	1.79	1.71	1.77

Minimum selection factor K_{SF} to achieve bearing lifetime L_{10mh} >100000 h

Selection table for Helical Gearboxes YZ2-2000 series

i	n_1	2355	2400	2450	2500	2530	2560	2600	2630
		T_{2N}	T_{2N}	T_{2N}	T_{2N}	T_{2N}	T_{2N}	T_{2N}	T_{2N}
	1/min	kNm	kNm	kNm	kNm	kNm	kNm	kNm	kNm
9:1	1800	73	104	141	203	243	283	359	419
	1500	75	106	146	204	251	284	356	421
	1000	74	106	149	202	249	286	351	423
10:1	1800	75	106	144	204	248	284	357	420
	1500	75	106	148	203	252	285	355	421
	1000	74	106	149	201	248	286	349	424
11.2:1	1800	75	106	147	204	253	285	356	421
	1500	74	106	148	203	251	286	353	422
	1000	73	106	148	200	247	285	348	422
12.5:1	1800	75	106	148	203	251	285	354	422
	1500	74	106	148	202	250	286	352	423
	1000	73	106	148	199	246	284	347	421
14:1	1800	74	106	148	202	250	286	353	422
	1500	74	106	149	201	249	286	350	424
	1000	73	105	147	198	245	283	345	419
16:1	1800	74	106	148	202	249	286	351	423
	1500	74	106	149	201	248	285	348	423
	1000	73	105	147	198	244	281	343	417
18:1	1800	74	106	149	201	248	286	349	424
	1500	73	106	148	200	247	284	347	422
	1000	73	104	146	197	244	280	342	416

T_{2N} = Gearbox nominal torque rating

Selection table for Helical Gearboxes YZ2-3000 series

i	n_1	3355	3400	3450	3500	3530	3560	3600	3630
		P_{1N}	P_{1N}	P_{1N}	P_{1N}	P_{1N}	P_{1N}	P_{1N}	P_{1N}
	1/min	kW	kW	kW	kW	kW	kW	kW	kW
20:1	1800	2 x 320	2 x 490	2 x 690	2 x 930	2 x 1170	2 x 1370	2 x 1650	2 x 1950
	1500	2 x 270	2 x 410	2 x 580	2 x 770	2 x 990	2 x 1130	2 x 1370	2 x 1600
	1000	2 x 180	2 x 270	2 x 390	2 x 510	2 x 650	2 x 750	2 x 920	2 x 1080
22.4:1	1800	2 x 320	2 x 470	2 x 660	2 x 840	2 x 1060	2 x 1230	2 x 1500	2 x 1850
	1500	2 x 260	2 x 390	2 x 540	2 x 700	2 x 880	2 x 1020	2 x 1240	2 x 1550
	1000	2 x 175	2 x 260	2 x 360	2 x 460	2 x 580	2 x 670	2 x 820	2 x 990
25:1	1800	2 x 280	2 x 420	2 x 580	2 x 750	2 x 940	2 x 1100	2 x 1350	2 x 1650
	1500	2 x 235	2 x 350	2 x 480	2 x 620	2 x 780	2 x 910	2 x 1120	2 x 1340
	1000	2 x 155	2 x 230	2 x 320	2 x 410	2 x 520	2 x 600	2 x 740	2 x 880
28:1	1800	2 x 250	2 x 370	2 x 520	2 x 660	2 x 840	2 x 970	2 x 1190	2 x 1450
	1500	2 x 210	2 x 310	2 x 430	2 x 550	2 x 700	2 x 810	2 x 990	2 x 1200
	1000	2 x 140	2 x 205	2 x 285	2 x 360	2 x 460	2 x 530	2 x 650	2 x 790
31.5:1	1800	2 x 225	2 x 340	2 x 480	2 x 610	2 x 740	2 x 860	2 x 1020	2 x 1290
	1500	2 x 185	2 x 280	2 x 390	2 x 510	2 x 620	2 x 710	2 x 850	2 x 1070
	1000	2 x 125	2 x 185	2 x 260	2 x 340	2 x 410	2 x 470	2 x 560	2 x 700
35.5:1	1800	2 x 200	2 x 295	2 x 420	2 x 550	2 x 660	2 x 770	2 x 910	2 x 1160
	1500	2 x 165	2 x 245	2 x 350	2 x 450	2 x 550	2 x 640	2 x 760	2 x 960
	1000	2 x 110	2 x 160	2 x 230	2 x 300	2 x 360	2 x 420	2 x 500	2 x 630
40:1	1800	2 x 180	2 x 265	2 x 380	2 x 490	2 x 610	2 x 690	2 x 820	2 x 1030
	1500	2 x 150	2 x 220	2 x 310	2 x 410	2 x 510	2 x 570	2 x 680	2 x 860
	1000	2 x 98	2 x 145	2 x 205	2 x 270	2 x 340	2 x 380	2 x 450	2 x 570
45:1	1800	2 x 160	2 x 235	2 x 340	2 x 440	2 x 530	2 x 610	2 x 730	2 x 920
	1500	2 x 135	2 x 195	2 x 280	2 x 360	2 x 440	2 x 510	2 x 610	2 x 760
	1000	2 x 88	2 x 130	2 x 185	2 x 240	2 x 290	2 x 340	2 x 400	2 x 500
50:1	1800	2 x 140	2 x 210	2 x 290	2 x 390	2 x 470	2 x 540	2 x 650	2 x 820
	1500	2 x 115	2 x 175	2 x 240	2 x 330	2 x 390	2 x 450	2 x 540	2 x 680
	1000	2 x 75	2 x 115	2 x 160	2 x 215	2 x 260	2 x 295	2 x 360	2 x 450

P_{1N} = Gearbox nominal power rating

Selection table for Helical Gearboxes YZ2-3000 series

i	n_1	3355	3400	3450	3500	3530	3560	3600	3630
		K_{SF}	K_{SF}	K_{SF}	K_{SF}	K_{SF}	K_{SF}	K_{SF}	K_{SF}
	1/min								
20:1	1800	2.27	1.94	2.00	2.23	2.27	2.22	2.27	2.24
	1500	2.19	1.88	1.94	2.14	2.23	2.14	2.23	2.19
	1000	2.05	1.88	1.93	1.96	2.04	1.96	2.08	2.05
22.4:1	1800	2.23	2.02	1.95	2.02	2.07	1.99	2.10	2.14
	1500	2.14	1.96	1.94	1.95	1.99	1.92	2.02	2.06
	1000	2.08	2.02	2.01	1.79	1.82	1.76	1.85	1.88
25:1	1800	2.02	1.96	1.93	1.81	1.83	1.78	1.99	1.90
	1500	2.04	1.98	1.97	1.75	1.79	1.73	1.91	1.83
	1000	2.08	2.03	2.03	1.67	1.79	1.69	1.75	1.67
28:1	1800	2.04	1.97	1.96	1.76	1.80	1.74	1.87	1.85
	1500	2.06	2.00	1.99	1.70	1.77	1.71	1.80	1.78
	1000	2.10	2.04	2.04	1.68	1.80	1.70	1.65	1.63
31.5:1	1800	2.06	1.99	1.97	1.70	1.78	1.72	1.87	1.74
	1500	2.07	2.01	2.00	1.64	1.76	1.69	1.80	1.68
	1000	2.10	2.05	2.05	1.69	1.82	1.72	1.65	1.63
35.5:1	1800	2.07	2.01	1.99	1.67	1.76	1.71	1.83	1.71
	1500	2.08	2.03	2.02	1.66	1.78	1.68	1.76	1.65
	1000	2.10	2.05	2.06	1.69	1.83	1.73	1.61	1.64
40:1	1800	2.08	2.02	2.01	1.65	1.77	1.69	1.79	1.67
	1500	2.09	2.04	2.03	1.67	1.79	1.69	1.72	1.63
	1000	2.09	2.05	2.06	1.70	1.83	1.73	1.62	1.65
45:1	1800	2.09	2.03	2.03	1.66	1.79	1.69	1.75	1.64
	1500	2.10	2.04	2.04	1.68	1.81	1.71	1.68	1.62
	1000	2.09	2.05	2.06	1.71	1.84	1.74	1.63	1.66
50:1	1800	2.10	2.04	2.04	1.67	1.80	1.70	1.71	1.62
	1500	2.10	2.05	2.05	1.69	1.82	1.72	1.64	1.63
	1000	2.08	2.05	2.06	1.71	1.84	1.74	1.63	1.66

Minimum selection factor K_{SF} to achieve bearing lifetime L_{10mh} >100000 h

Selection table for Helical Gearboxes YZ2-3000 series

i	n_1	3355	3400	3450	3500	3530	3560	3600	3630
		T_{2N}	T_{2N}	T_{2N}	T_{2N}	T_{2N}	T_{2N}	T_{2N}	T_{2N}
	1/min	kNm	kNm	kNm	kNm	kNm	kNm	kNm	kNm
20:1	1800	67	99	139	200	242	285	334	396
	1500	67	99	140	199	246	283	340	398
	1000	67	98	141	196	243	279	340	404
22.4:1	1800	73	106	148	199	246	284	346	420
	1500	73	105	147	198	245	282	344	418
	1000	72	104	145	196	242	278	340	412
25:1	1800	73	105	147	198	245	283	346	420
	1500	73	105	147	197	244	281	344	416
	1000	72	104	145	195	241	278	338	412
28:1	1800	73	105	147	198	244	282	344	418
	1500	72	104	146	197	243	280	342	416
	1000	72	103	145	195	240	277	338	410
31.5:1	1800	73	105	146	197	243	280	342	416
	1500	72	104	146	196	242	279	340	414
	1000	72	103	144	194	239	276	336	408
35.5:1	1800	72	104	146	197	243	280	342	414
	1500	72	104	145	196	241	278	340	412
	1000	71	103	144	194	239	275	336	408
40:1	1800	72	104	146	196	242	279	340	414
	1500	72	103	145	195	241	277	338	412
	1000	71	102	143	193	238	274	334	406
45:1	1800	72	104	145	195	241	278	338	412
	1500	72	103	144	195	240	276	336	410
	1000	71	102	143	193	238	274	334	406
50:1	1800	72	103	145	195	240	277	338	410
	1500	71	103	144	194	239	275	336	408
	1000	71	102	143	192	237	273	332	404

T_{2N} = Gearbox nominal torque rating

Exact Ratios for Helical Gearboxes YZ-series

i	2355	2400	2450	2500	2530	2560	2600	2630
9:1	9.111	8.917	9.022	8.850	8.763	8.855	8.818	8.934
10:1	10.118	9.907	10.019	10.333	9.907	10.125	9.836	9.921
11.2:1	11.285	11.057	11.176	11.340	11.057	11.250	11.023	11.066
12.5:1	12.656	12.406	12.533	12.717	12.483	12.563	12.225	12.410
14:1	14.075	14.012	13.938	14.357	13.957	14.114	13.778	13.801
16:1	15.877	15.402	15.320	15.545	15.701	15.975	15.957	15.465
18:1	17.913	18.036	17.296	17.795	17.621	17.775	17.846	17.147

i	3355	3400	3450	3500	3530	3560	3600	3630
20:1	20.235	19.495	19.705	21.023	20.182	20.250	20.036	20.184
22.4:1	22.570	21.757	21.979	23.071	22.523	22.500	22.454	22.514
25:1	25.312	24.411	24.648	25.873	25.429	25.125	24.903	25.248
28:1	28.149	27.572	27.411	29.209	28.430	28.227	28.067	28.078
31.5:1	31.755	30.306	30.130	31.627	31.984	31.950	32.504	31.463
35.5:1	35.566	34.653	33.923	35.121	35.798	35.500	36.381	34.940
40:1	39.083	38.504	37.711	39.175	38.599	39.618	40.505	38.972
45:1	43.663	42.996	42.130	43.933	44.486	44.452	45.211	43.706
50:1	50.657	48.305	48.412	48.857	49.958	50.207	50.423	48.604

Dimension Drawing YZ1-series ratio i = 9.0 - 50

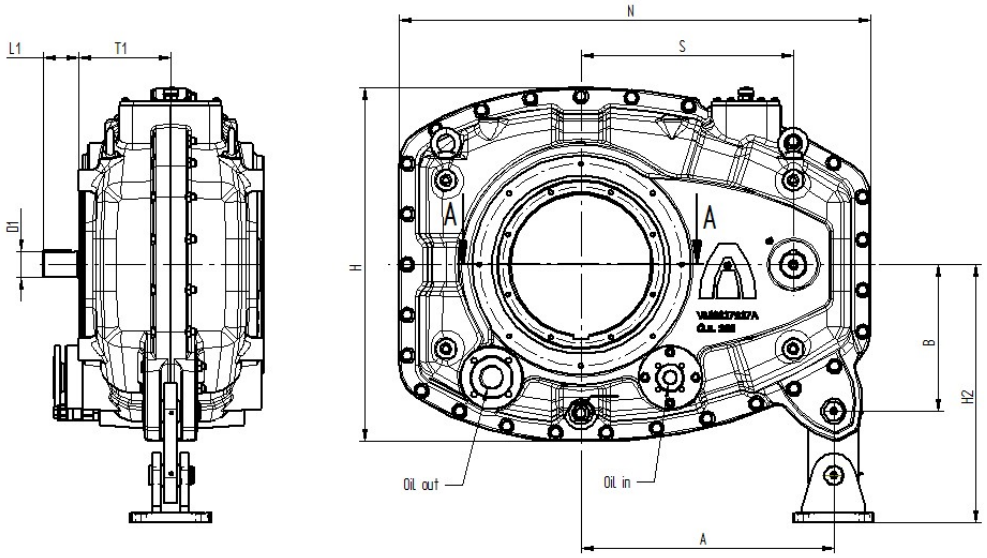

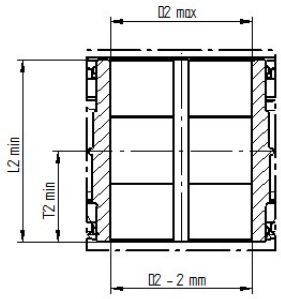

Section A-A

Size	A	B	H	H2	N	S	T1	T2 min	D1 YZ1S 2000	L1 YZ1S 2000	D1 YZ1S 3000	L1 YZ1S 3000	D2 max	L2 min	Oil in DIN 2633	Oil out DIN 2633
355	600	345	830	635	1110	500	220	212	60	105	40	82	330	424	C25 X 33,7	C50 X 60,3
400	670	390	935	680	1248	560	245	236	65	105	50	82	380	472	C32 X 42,4	C65 X 76,1
450	750	435	1050	765	1400	630	275	265	75	105	55	82	420	530	C32 X 42,4	C65 X 76,1
500	850	485	1170	855	1560	710	305	300	85	130	60	105	470	600	C32 X 42,4	C65 X 76,1
530	900	515	1240	885	1650	750	325	315	90	130	65	105	510	630	C40 X 48,3	C80 X 88,9
560	950	540	1305	960	1738	800	340	335	95	130	70	105	540	670	C40 X 48,3	C80 X 88,9
600	1000	580	1400	1000	1865	850	365	355	100	165	75	105	570	710	C50 X 60,3	C100 X 114,3
630	1050	610	1470	1030	1955	900	385	375	110	165	80	130	590	750	C50 X 60,3	C100 X 114,3

Dimension Drawing YZ2-series

ratio i = 9.0 - 50

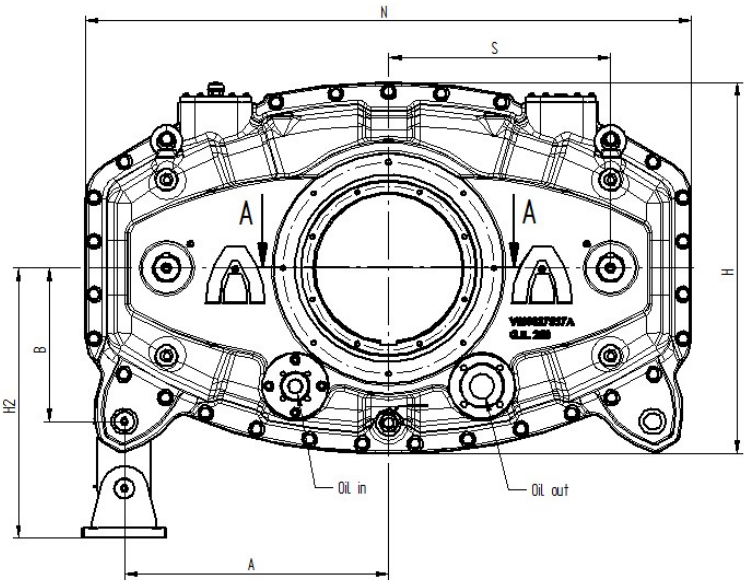

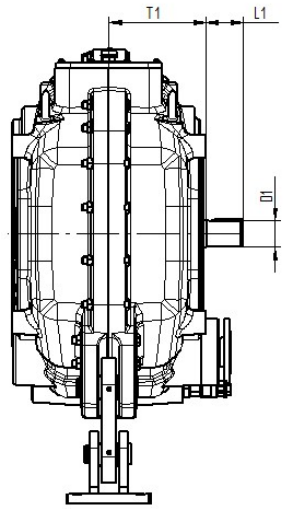

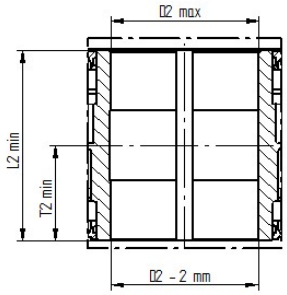

Section A-A

Size	A	B	H	H2	N	S	T1	T2 min	D1 YZ2S 2000	L1 YZ2S 2000	D1 YZ2S 3000	L1 YZ2S 3000	D2 max	L2 min	Oil in DIN 2633	Oil out DIN 2633
355	600	345	830	635	1360	500	220	212	60	105	40	82	330	424	C25 X 33,7	C50 X 60,3
400	670	390	935	680	1530	560	245	236	65	105	50	82	380	472	C32 X 42,4	C65 X 76,1
450	750	435	1050	765	1720	630	275	265	75	105	55	82	420	530	C32 X 42,4	C65 X 76,1
500	850	485	1170	855	1920	710	305	300	85	130	60	105	470	600	C32 X 42,4	C65 X 76,1
530	900	515	1240	885	2030	750	325	315	90	130	65	105	510	630	C40 X 48,3	C80 X 88,9
560	950	540	1305	960	2140	800	340	335	95	130	70	105	540	670	C40 X 48,3	C80 X 88,9
600	1000	580	1400	1000	2300	850	365	355	100	165	75	105	570	710	C50 X 60,3	C100 X 114,3
630	1050	610	1470	1030	2410	900	385	375	110	165	80	130	590	750	C50 X 60,3	C100 X 114,3

Hollow shaft diameter

Size	Min hollow shaft [mm]	Max hollow shaft [mm]
355	Ø 290	Ø 330
400	Ø 340	Ø 380
450	Ø 380	Ø 420
500	Ø 420	Ø 470
530	Ø 470	Ø 510
560	Ø 510	Ø 540
600	Ø 540	Ø 570
630	Ø 570	Ø 590

Hollow shaft design:

- With keyway
- With shrink disk
- Special design according to customer specification

Average Weights of Gearboxes (kg)

Size	YZ1S2000	YZ2S2000	YZ1S3000	YZ2S3000
355	1040	1240	1090	1260
400	1450	1750	1480	1800
450	1840	2300	1870	2360
500	2470	3120	2540	3250
530	2820	3600	2920	3790
560	3070	3980	3110	4060
600	3680	4750	3850	4850
630	4410	5680	4740	5830

Sunday Drive

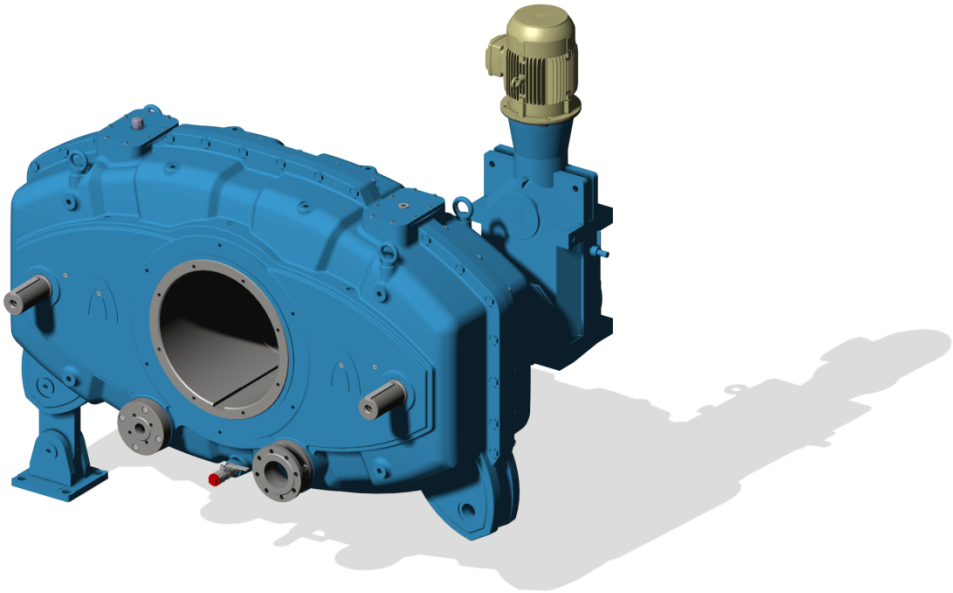

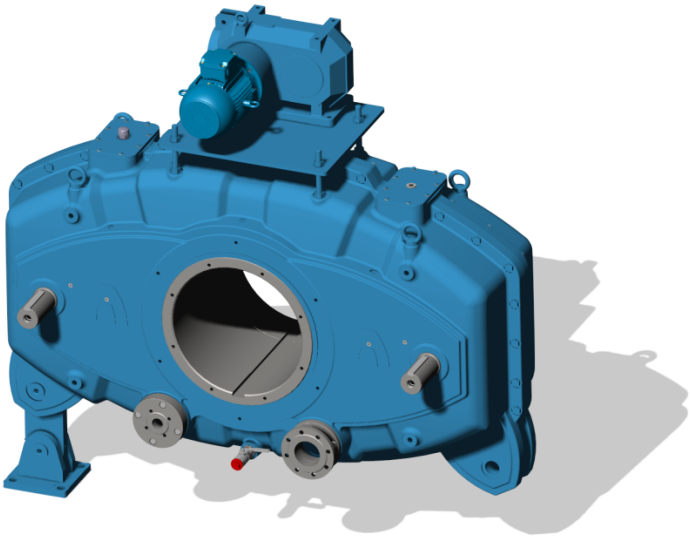

Sunday drive can be either belt driven or direct coupled with freewheel clutch.

Gearboxes for tissue machines

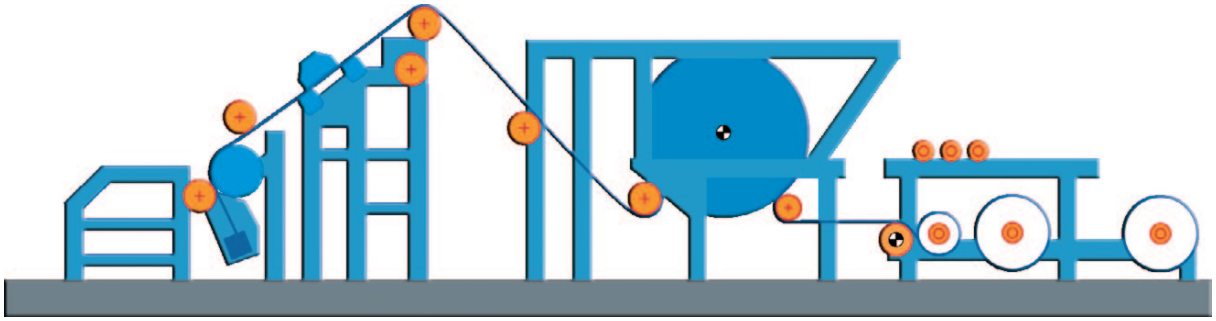

Forming section	Dryer section	Reeling section
Forming roll LX-series	**Dryer cylinder** Yankee cylinder gear units **Sunday drive** LF-series	**Reel drum** LX-series

Special gearboxes for tissue machines

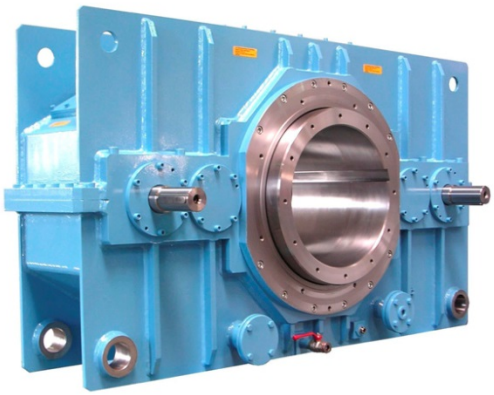

Notes

Notes

KUMERA POWER TRANSMISSION GROUP

www.kumera.com

KUMERA

KUMERA DRIVES OY
Kumerankatu 2
FI-11100 Riihimäki
FINLAND
Tel. +358 20 755 4200
Fax: +358 20 755 4220
drives@kumera.com

KUMERA AS
P.O. Box 2043
N-3202 Sandefjord
NORWAY
Tel. +47 33 48 54 54
Fax: +47 33 48 54 55
sales@kumera.no

KUMERA ANTRIEBSTECHNIK GMBH
Raiffeisenstrasse 38-40
A-8010 Graz
AUSTRIA
Tel. +43 316 471 524-0
Fax: +43 316 462 550
kumera.graz@kumera.com

KUMERA (CHINA) CO, LTD.
168 Meifeng Road
Kunshan 215300, Jiangsu
CHINA
Tel. +86 512 503 61701
Fax: +86 512 503 61710
kumerachina@kumera.com

K022 03/2015